ORDER No. SM 90039

Service Manual

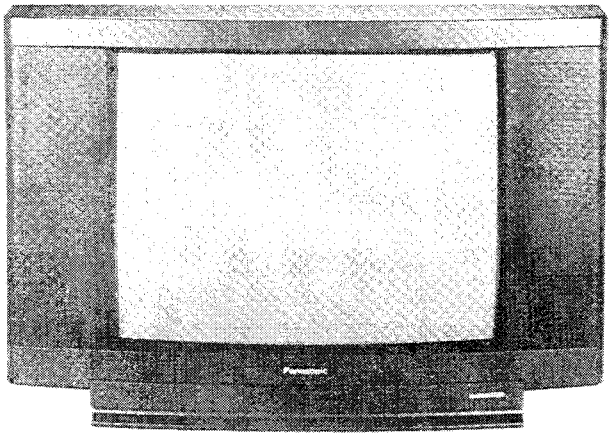

Colour Television

TX-28W2C / 25W2C
TX-28W2CI / 25W2CI
ALPHA-3 Chassis

Specifications

(Information in brackets refers to TX-25W2C / 25W2CI)

Power Source:	230 V AC, 50 Hz
Power Consumption:	110 Wh (102) Wh
Aerial Impedance:	75 Ω unbalanced, Coaxial Type
Receiving System:	PAL-B, G SECAM-B, G
Receiving Channels:	VHF E2-E12 UHF E21-E69 CATV S1-S20 HYPER S21-S41
Intermediate Frequency:	Video 38.9 MHz Sound 33.4 MHz Colour 34.47 MHz (PAL) 34.5 MHz (SECAM) 34.65 MHz (SECAM)
Video/Audio Terminals:	
AV1/21 pin IN	Video 1 Vp-p 75 Ω Audio 0.67 Vrms, 10k Ω
AV1/21 pin OUT	Video 1 Vp-p 75 Ω Audio 0.67 Vrms (100 % modulation) 1k Ω
AV2/21 pin IN	Video 1 Vp-p 75 Ω Audio 0.67 Vrms, 10k Ω
AV2/21 pin OUT	Video 1 Vp-p 75 Ω Audio 0.67 Vrms (100 % modulation) 1k Ω
AV2/21 pin S-Video IN	Y : 1 Vp-p 75 Ω C : 0.3 Vp-p 75 Ω
AV2 IN S-Video	Y : 1 Vp-p 75 Ω C : 0.3 Vp-p 75 Ω
AV2 IN Audio(RCA)	0.67 Vrms, 10k Ω
High Voltage:	29.0 kV at zero beam current
Picture Tube:	28 inches (24 inches) measured diagonally, 110° deflection
Audio Output:	2 x 20W (Music Power) 8 Ω Impedance
Speakers:	2 15 x 7 cm oval (Woofer) 2 4.5 cm (Tweeter)
Headphones:	1: 8 Ω Impedance
Accessories supplied:	Remote Controller UM4 Battery
Dimensions:	Height: 589.5 (522) mm Width: 825 (766) mm Depth: 484 (455) mm
Net Weight:	38.5kg (35kg)

Specifications are subject to change without notice.
Weight and dimensions shown are approximate.

Technische Daten

(Werte in Klammern gelten nur fur TX-25W2C / 25W2CI)

Netzpannung:	230 V AC, 50 Hz
Leistungsaufnahme:	110 Wh (102) Wh
Antennenimpedanz:	75 Ω asymmetrisch, Koaxial-Typ
Empfangssystem:	PAL - B,G SECAM-B, G
Empfangsbereiche:	VHF E2 - E12 UHF E21-E69 CATV S1-S20 HYPER S21-S41
Zwischenfrequenz:	Bild 38,9 MHz Ton 33,4 MHz Farbe 34,47 MHz (PAL) 34.5 MHz (SECAM) 34.65 MHz (SECAM)
Video/Audio Anschüsse:	
AV1/21-poliger Eingang	Video 1 Vs-s 75 Ω Audio 0.67 Vrms, 10k Ω
AV1/21 pin-poliger Ausgang	Video 1 Vs-s 75 Ω Audio 0.67 Vrms (100 %modulation) 1k Ω
AV2/21-poliger Eingang	Video 1 Vs-s 75 Ω Audio 0.67 Vrms, 10k Ω
AV2/21 pin-poliger Ausgang	Video 1 Vs-s 75 Ω Audio 0.67 Vrms (100 %modulation) 1k Ω
AV2/21 pin-poliger S-VHS Eingang	Y : 1 Vp-p 75 Ω C : 0.3 Vp-p 75 Ω
AV2 S-VHS Eingang	Y : 1 Vp-p 75 Ω C : 0.3 Vp-p 75 Ω
AV2/Audio (RCA) Eingang	0.67 Vrms, 10k Ω
Hochspannung:	29.0 kV bei Nullstrahlstom
Bildröhre :	70cm (63cm) Diagonale, 110° Ablenkung
Ton Ausgangsleistung:	2 x 20W (Musikleistung) 8 Ω Impedanz
Lautsprecher:	2 15 x 7 cm oval (Bass) 2 4.5 cm (Hochtöner)
Kopfhörer:	1: 8Ω Impedanz
Mitgeliefertes Zubehör:	Fernbedienung UM4 Batterien
Abmessungen:	Höhe: 589.5 (522) mm Breite: 825 (766) mm Tiefe: 484 (455) mm
Gewicht:	38.5kg (35kg)

Änderungen der technischen Daten vorbehalten.
Gewichte und Abmessungen sind Näherungsangaben.

Panasonic

CONTENTS

SAFETY PRECAUTIONS	2
LOCATION OF CONTROLS	4
SERVICE HINTS	4
ADJUSTMENTS	6
BLOCK DIAGRAMS	10
CONDUCTOR VIEWS	14
PCB LOCATION	19
SCHEMATIC DIAGRAMS	20
PARTS LOCATION	35
REPLACEMENT PARTS LIST	37

INHALT

SICHERHEITSVORKEHRUNGEN	2
KONTROLLANLAGE	4
WARTUNGSHINWEISE	4
JUSTIERUNGEN	6
BLOCKSCHALTBILDER	10
ANSICHT DER LEITERBAHNEN	14
LAGE DER PLATINEN	19
SCHALTBILD SCHEMA	20
EXPLOSIONSZEICHNUNG	35
ERSATZEILLISTE	37

SAFETY PRECAUTIONS

GENERAL GUIDELINES

1. It is advisable to insert an isolation transformer in the AC supply before servicing a hot chassis.
2. When servicing, observe the original lead dress, especially the lead dress in the high voltage circuits. If a short circuit is found, replace all parts which have been overheated or damaged by the short circuit.
3. After servicing, see to it that all the protective devices such as insulation barriers, insulation papers, shields and isolation R-C combinations are properly installed.
4. When the receiver is not to be used for a long period of time, unplug the power cord from the AC outlet.
5. Potential, as high as 30.0 kV, is present when this receiver is in operation. Operation of the receiver without the rear cover involves the danger of a shock hazard from the receiver power supply. Servicing should not be attempted by anyone who is not throughly familiar with the precautions necessary when working on high voltage equipment. Always discharge the anode of the picture tube to the receiver chassis before handling the tube.
6. After servicing make the following leakage current checks to prevent the customer from being exposed to shock hazards.

LEAKAGE CURRENT COLD CHECK

1. Unplug the AC cord and connect a jumper between the two prongs on the plug.
2. Turn on the receiver's power switch.
3. Measure the resistance value, with an ohmmeter, between the jumpered AC plug and each exposed metallic cabinet part on the receiver, such as screwheads, aerials, connectors, control shafts, etc. When the exposed metallic part has a return path to the chassis, the reading should be between 4M ohm and 20M ohm. When the exposed metal does not have a return path to the chassis, the reading must be infinite.

SICHERHEITSVORKEHRUNGEN

ALLGEMEINE RICHTLINIEN

1. Es ist empfehlenswert, einen Trenntransformator in die Stromversorgung zu schalten, bevor Reparaturen an einem Gerät vorgenommen werden, dessen Chassis unter Spannung steht.
2. Bei der Durchführung von Servicearbeiten dürfen die ursprünglichen Kabelanschlüsse nicht vertauscht werden. Dies gilt insbesondere für die Anschlüsse im Hochspannungsteil. Hat sich ein Kurzschluß ereignet, dann sind alle Teile, an denen Spuren von Überhitzung sichtbar sind, auszuwechseln.
3. Nach Beenden der Servicearbeiten ist sicherzustellen, daß alle Sicherheitsvorrichtungen, wie Isolationsstege, Isolationspapiere, Abschirmungen und Isolations - R -C - Glieder wieder richtig eingesetzt sind.
4. Wenn der Fernseher während längerer Zeit nicht in Betrieb gesetzt wird, sollte der Netzstecker aus der Netzsteckdose gezogen werden.
5. Im Betrieb sind Spannungen bis zu 30.0kV in diesem Gerät vorhanden. Die Inbetriebnahme des Fernsehers ohne aufgesetzte Rückwand bringt die Gefahr eines elektrischen Schlages von der Fernseher - Stromversorgung mit sich. Servicearbeiten sollten daher auch nie durch Personen versucht werden, die nicht in vollem Umfang mit den Sicherheitsvorkehrungen beim Umgang mit Hochspannungsgeräten vertraut sind. Vor der Handhabung mit der Bildröhre ist die Anode der Bildrohre immer an dem Empfängerchassis zu entladen.
6. Nach Beenden der Servicearbeiten sind die folgenden Kriechstrom-Prüfungen durchzuführen, um den Kunden vor der Gefahr eines elektrischen Schlages zu schützen.

MESSUNG DES ISOLATIONSWIDERSTANDES IM ABGESCHALTETEN ZUSTAND

1. Den Netzstecker aus der Netzsteckdose ziehen und die beiden Steckerstifte kurzschließen.
2. Den Geräteschalter des Fernsehgerätes einschalten.
3. Mit einem Ohmmeter den Widerstandswert zwischen dem überbrückten Netzkabelstecker und jedem zugänglichen Metallteil am Gehäuse des Fernsehgerätes, wie Schraubenköpfe,Antennen, Achsen der Regler, Griffassungen usw.messen. Wenn ein zugängliches Metallteil eine Rückleitung zum Chassis hat, sollte die Anzeige zwischen 4M ohm und 20M ohm betragen. Wenn ein zugängliches Metallteil keine Rückleitung zum Chassis hat, muß die Anzeige unendlich betragen.

LEAKAGE CURRENT HOT CHECK (See Fig 1)

1. Plug the AC cord directly into the AC outlet. Do not use the isolation transformer for this check.
2. Connect a 2 k ohm, 10W resistor, in series with an exposed metallic part on the receiver and an earth such as water pipe.
3. Use an AC voltmeter, with 1000 ohms/volt or more sensitivity, to measure the potential across the resistor.
4. Check each exposed metallic part, and measure the voltage at each point.
5. Reverse the AC plug in the AC outlet and repeat each of the above measurements.
6. The potential at any point should not exceed 1.4 volts RMS. In case a measurement is outside of the limits specified, there is a possibility of a shock hazard, and the receiver should be repaired and rechecked before it is returned to the customer.

HOT CHECK CIRCUIT

SCHALTUNGSAUFBAU FÜR PRUFUNG IM EINGESCHALTETEN ZUSTAND

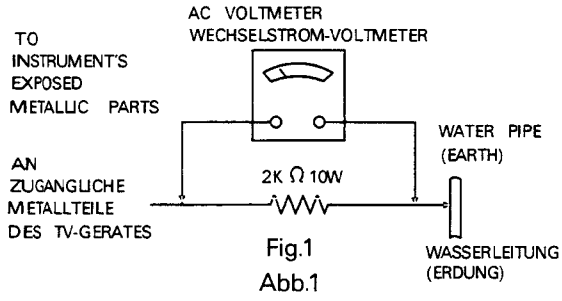

Fig.1
Abb.1

X-RADIATION
WARNING:

1. The potential sources of X-Radiation in TV sets are the High Voltage section and the picture tube.
2. When using a picture tube test jig for service, ensure that jig is capable of handling 30.0 kV without causing X-Radiation.

NOTE: It is important to use an accurate periodically calibrated high voltage meter.

1. Set the brightness to minimum.
2. Set the service switch to the SERVICE position.
3. Measure the High Voltage. The meter reading should indicate 29.0 (+0.7 /- 1.5)kV. If the meter indication is out of tolerance, immediate service and correction is required to prevent the possibility of premature component failure.
4. To prevent an X-Radiation possibility, it is essential to use the specified tube.

SHUT DOWN CIRCUIT TEST

This test must be made as a final check before the set is returned to the customer.

1. With the rear cover removed, supply nominal 230V AC to the set, turn on the power switch.
2. Receive a Phillips pattern.
3. Supply - 40 V DC to TPD7, and confirm that the shut down circuit does not operate.
4. Supply - 60 V DC to TPD7, and confirm that the shut down circuit operates.

MESSUNG DES KRIECHSTROMS IM EINGESCHALTETEN ZUSTAND (Siehe Abb. 1)

1. Den Netzstecker direkt in eine Netsteckdose stecken. Für diese Messung keinen Trenntransformator verwenden.
2. Einen 2k ohm /10 W - Widerstand in Serie mit einem von außen zugänglichen Metallteil am Fernsehgerät und einer guten, Erdung z.B. Wasserleitung, anschließen.
3. Ein Wechselstrom-Voltmeter mit einem Meßbereich von 1000 Ohm/Volt oder größer verwenden, um die Spannung über den Widerstand zu messen.
4. Jedes zugängliche Metallteil prüfen, und an jedem Punkt dies Spannung messen.
5. Den Netztecker umgekehrt in die Steckdose stecken und jede der obigen Messungen wiederholen
6. Die Spannung darf an keinem der Punkte 1.4V eff. überschreiten. Wird dieser Wert nicht eingehalten, besteht die Gefahr eines elektrischen Schlages, und das Fernsehgerät sollte daher repariert und nachgeprüft werden, bevor es an den Kunden zurückgegeben wird.

RÖNTGENSTRAHLUNG

ACHTUNG:

1. Potentielle Quellen von Röntgenstrahlung in Fernsehgeräten sind das Hochspannungsteil und die Bildröhre.
2. Bei Verwendung eines Bildröhren-Prüfgerätes für den Service ist sicherzustellen, daß es für die Belastung von 30.0 kV geeignet ist, ohne daß eine Röntgenstrahlung verursacht wird.

ANMERKUNG: Es ist wichtig , daß ein präzises, regelmäßig geprüftes Voltmeter verwendet wird.

1. Helligkeit auf Minimum stellen.
2. Den Service-Schalter in die 'SERVICE' - Position stellen.
3. Die Hochspannung messen. Die Anzeige des Instrumentes sollte 29.0 (+0.7 /- 1,5) betragen. Falls die Anzeige diese Toleranzgrenzen überschreitet, ist die sofortige Behebung nötig, um die Möglichkeit vorzeitigen Komponentenausfalls zu verhüten.
4. Um die Möglichkeit von Röntgenstrahlung zu begrenzen, ist es wichtig, daß nur die vorgeschriebene Bildröhre verwendet wird.

TEST KURZSCHLLUSS-SICHERHEITSSCHALTUNG

Dieser Test muß als letzte Prüfung vor der Rückgabe des Gerätes an den Kunden durchgeführt werden.

1. Bei abgenommener Rückwand ist dem Gerät 230V Nennspannung zuzuführen, und der Geräteschalter einzuschalten.
2. Ein Phillips-Muster empfangen.
3. Gleichspannung von - 40V an TPD7 einspeisen und sicherstellen, daß die Kurzschluß- Sicherheitsschaltung nicht anspricht.
4. Gleichspannung von - 60V an TPD7 einspeisen und sich vergewissern, daß die Kurzschluß- Sicherheitsschaltung jetzt anspricht.

LOCATION OF CONTROLS

KONTROLLANLAGE

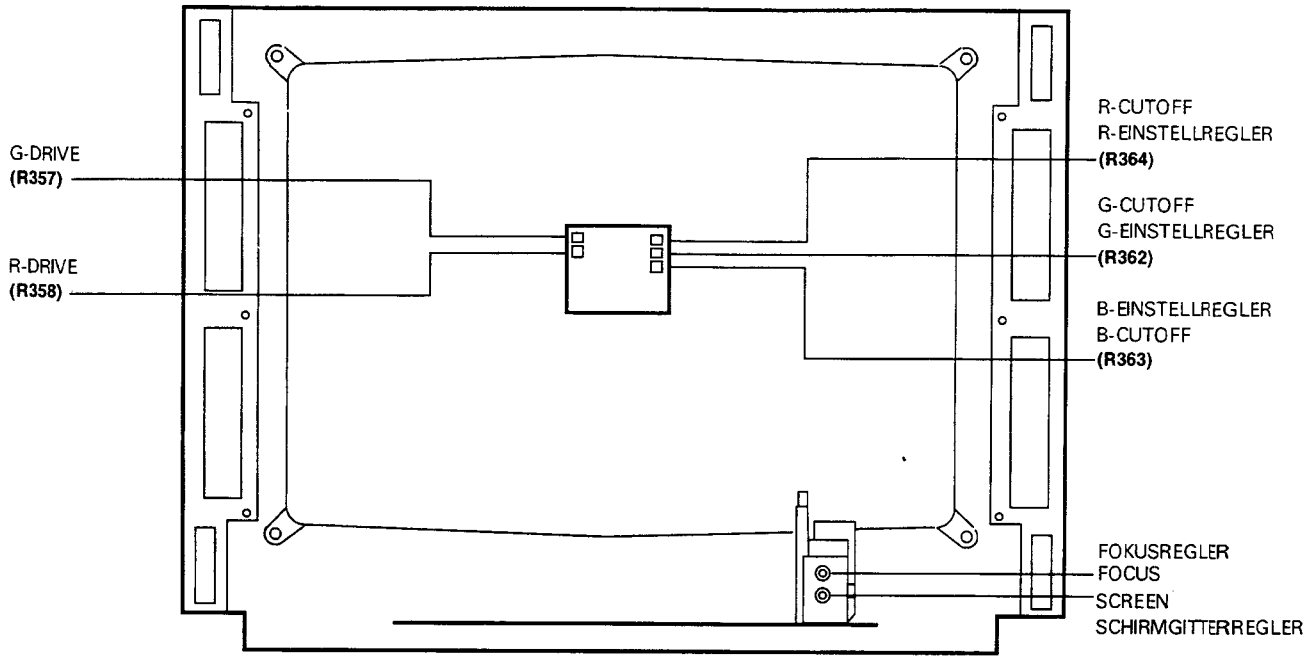

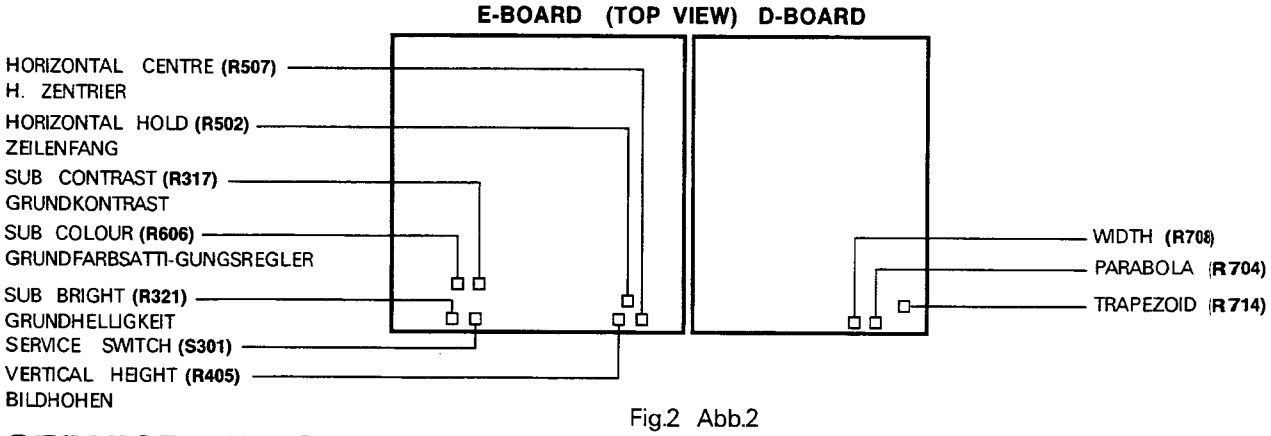

Fig.2 Abb.2

SERVICE HINTS

HOW TO REMOVE THE REAR COVER

1. Remove the screw (A) as shown in Fig.3.
2. Insert a flat blade screw driver into the slot of each rear cover fixing clip and release the 7 rear cover fixing clips as shown in Fig.4.

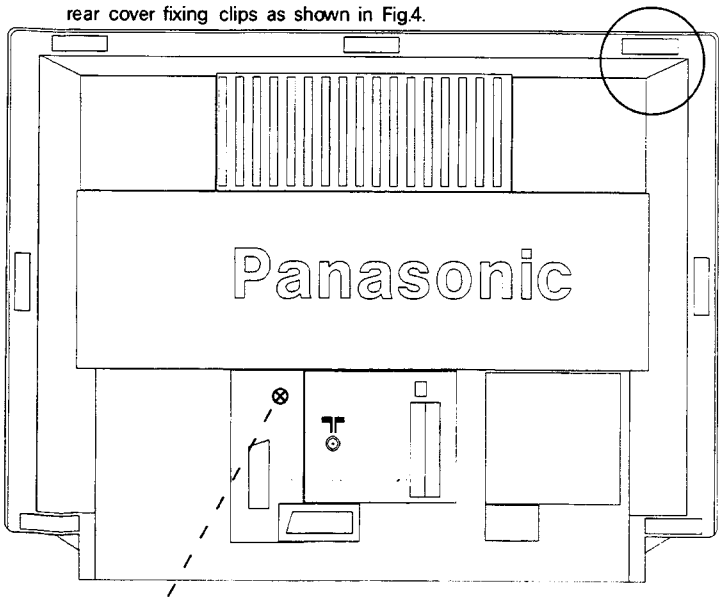

Fig.3 Abb.3

SERVICE HINWEISE

ENTFERNEN DER GERÄTERÜCKWAND

1. Die Schrauben (A) entfernen, siehe Abb.3.
2. Mit einem schmalen, flachen Schraubendreher die fünf Klammern der Rückwand öffnen, siehe Abb.4.

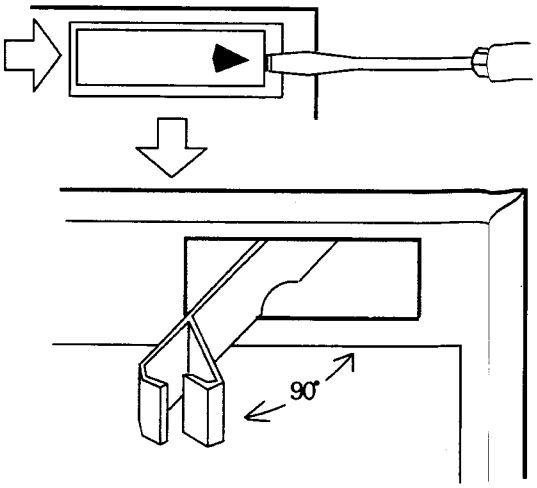

Fig.4 Abb.4

HOW TO MOVE CHASSIS INTO SERVICE POSITION

1. Remove the 2 screws (B) as shown in Fig.5.
2. Remove the 1 screw (C) as shown in Fig.6.
3. Hold and lift the tabs (D) of chassis as shown in Fig.6, gently pull the chassis towards you.
4. Unclip the Control block from the main chassis and release the respective wiring clips.
5. Turn the Chassis through 90 degrees anti-clockwise as shown in Fig.7.
6. Slide part (E) and clip (F) of the chassis bracket, onto the support bracket as shown in Fig.8.

CHASSIS IN SERVICESTELLUNG BRINGEN

1. Die zwei Schrauben entfernen (B) wie in Abb.5 gezeigt.
2. Die eine Schraube entfernen (C) wie in Abb.6 gezeigt.
3. Halten und heben Sie die Hebel (D) des Chassis wie in Abb. 6 gezeigt und ziehen Sie das Chassis langsam heraus.
4. Lösen Sie den Controlblock von der Hauptplatine und öffnen Sie die dazugehörigen Kabelklammern.
5. Drehen Sie jetzt das Chassis um 90° entgegen dem Uhrzeiger in die Position wie in Abb.7 gezeigt.
6. Den Steckschuh (E) und den Klipp (F) der Chassishalter in den dafür vorgesehenen Halteteil an der Gehäuseseite schieben wie in Abb.8 gezeigt.

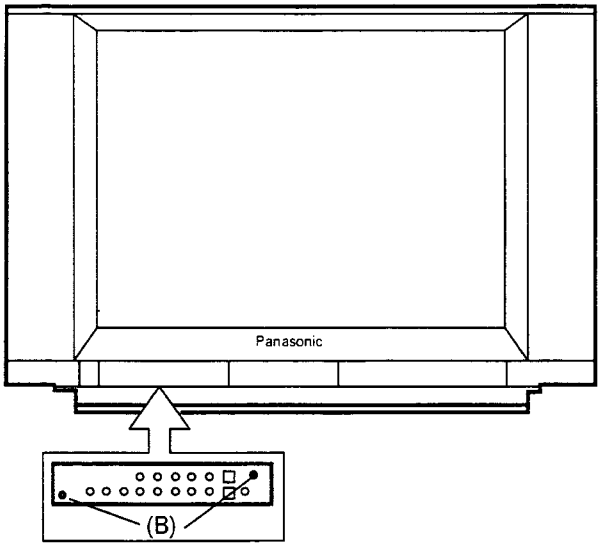

Fig.5 Abb.5

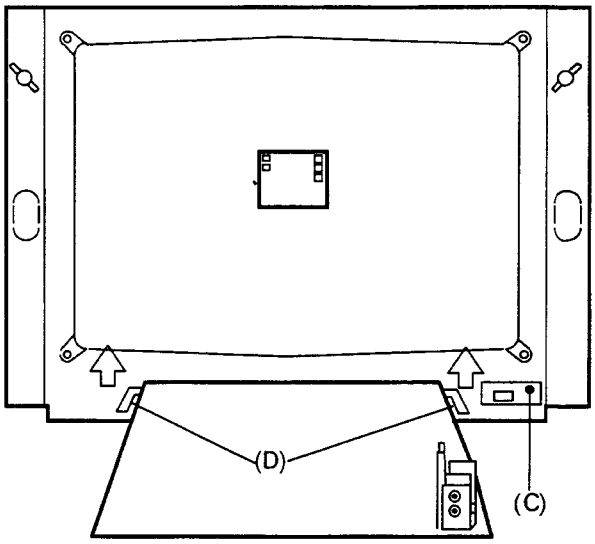

Fig.6 Abb.6

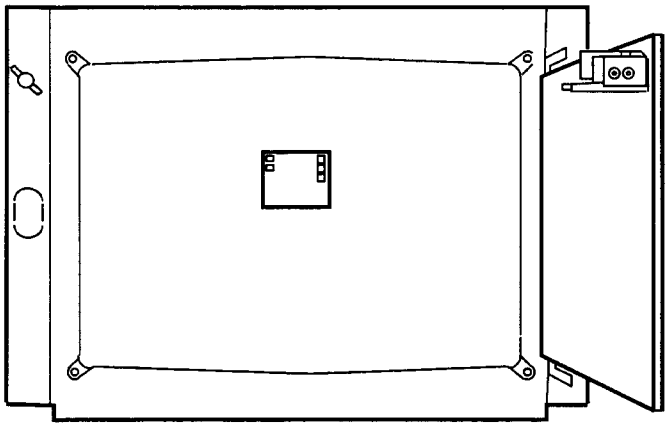

Fig.7 Abb.7

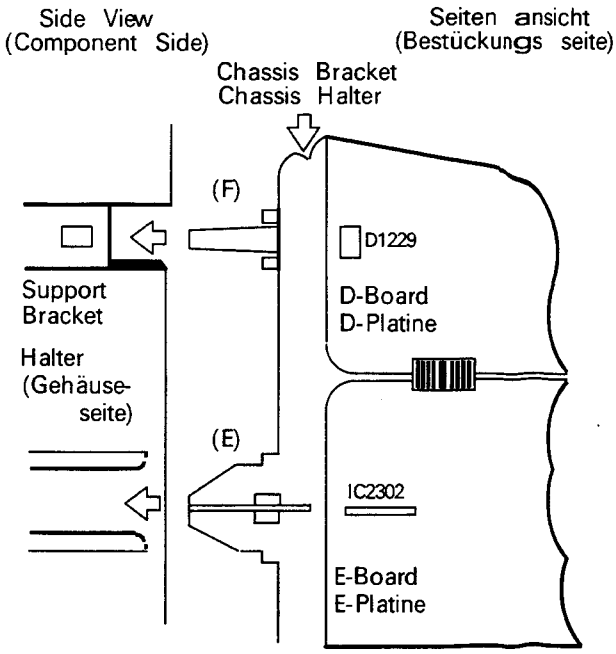

Fig.8 Abb.8

SERVICE POSITION FOR B,H AND C BOARDS

Note: An extension lead wire service kit, comprising of (5) leads can be used to service any of the above boards. Part number of this kit is TZS701007.

1. Remove the appropriate board to be serviced from the E-Board.
2. Connect the extension lead wires between the board and E-Board and then position away from the main chassis and ensure they are not touching.
3. After servicing ensure all wiring is returned to its original position before returning the receiver to the customer.

Servicestellung für B-, H-, und C-Platine

Bemerkung: Ein Verlängerungskabel-Set, bestehend aus (5) Kabeln, kann zum Reparieren jeder der obengenannten Platinen benutzt werden, Bestell-Nr. des Kabel-Kits ist TZS701007

1. Lösen Sie die zu reparierende Platine von der E-Platine.
2. Dann verwenden Sie die Verlängerungskabel, um die Platine wieder mit der E-Platine zu verbinden. Achten Sie auf genügenden Abstand, damit es zu keinem Kurzschluß kommt.
3. Nach Beendigung der Reparatur bringen Sie die Platine wieder in die Original position.

ADJUSTMENTS

ITEM/PREPARATION	ADJUSTMENT PROCEDURE
B VOLTAGE 1. Operate the TV set. 2. Set controls: Bright ..... minimum Sub-bright ..... minimum	1. Confirm the indicated test points for the specified voltage. **TPD1:** 151.5 +/- 1.2V **TPD10:** 215.0 +/- 10.0V **TPD3:** 36.0 +/- 2.0V **TPD34:** 25.5 +/- 1.0V **TPD4:** 15.5 +/- 1.0V **TPD66:** 9.0 +/- 1.0V **TPD9:** 33.0 +/- 2.0V
AFC 1. Operate the TV set. 2. Supply 38.9MHz continuous wave from an oscillator to **TPB20** (0.5 V p-p, 75Ω terminated). 3. Connect a DC voltmeter to **TPB25.**	1. Adjust **L106** so that the voltage at **TPB25** becomes 4.0V +/- 0.2V. 2. Change the frequency and confirm the voltage as shown below. + 100 kHz: less than 2.0V - 100 kHz: more than 6.0V
RF AGC 1. Receive a Philips pattern. 2. Set the input level to 60 dB +/- 2 dB (75Ω open). 3. Connect an oscilloscope to **TPB24** with DC mode.	1. Turn RF AGC control **R128** fully clockwise. 2. Slowly turn **R128** counterclockwise to set it at the point before the voltage at **TPB24** drops. **Note :** In this case , gain range of the oscilloscope is 1 V/div, and set **R128** to a point where this voltage drops by 0.2 V.
HIGH VOLTAGE 1. Receive a crosshatch pattern. 2. Set controls: Bright..... minimum Contrast..... miminum Sub-bright ..... minimum (Zero beam current)	1. Connect a DC voltmeter to **TPD1** and confirm the voltage is 151.5V +/- 1.2 V. 2. Connect a high-voltage meter (Electrostatic type) to the anode of the picture tube. 3. Confirm that the high voltage is within a range of 29.0 (+0.7 or -1.5) kV.
TELETEXT CLOCK 1. Operate the TV. 2. Connect a short jumper between **TPH3** and **TPH11**. 3. Connect a frequency counter to **TPH4**.	1. Adjust **C3528:** Reading on the frequency counter: 6.01 MHz +/- 5 kHz. 2. Remove the short jumper.
NOISE MUTE 1. Operate the TV set. 2. Connect a frequency counter to **TPB19**.	1. Adjust **R186:** Reading on the frequency counter: 15.575kHz +/- 100 Hz.
PILOT CARRIER 1. Receive a signal with stereo sound. 2. Connect an oscilloscope to **TPB18**.	1. Adjust **L2201** and **R2209** to maximize the amplitude of sine wave on the oscilloscope. 2. Change the stereo sound into a multiplex sound and connection of the oscilloscope to **TPB17.** 3. Adjust **L2201** and **R2210** to maximize the amplitude of the sine wave. **Note :** Adjusted position of **L2201** must be at the point where both stereo sound and multiplex sound are maximized.
CHANNEL SEPARATION 1. Receive a Stereo Signal with 40 % modulation at 1kHz for R channel, 0 % modulation for L channel. 2. Connect an oscilloscope to **TPB33**.	1. Adjust **R2224** to minimize signal level at **TPB33**.

JUSTIERUNGEN

ABGLEICHPUNKTE UND VORBEREITUNG	JUSTIERUNG
VERSORGUNGSSPANNUNG B 1. TV einschalten. 2. Die Regler wie folgt einstellen: Helligkeit ..... minimum Grundhelligkeitsregler . minimum	1. Die Messungen an den Testpunkten sollen folgende Betriebsspannungen ergeben. **TPD1:** 151.5 +/- 1.2V **TPD10:** 215.0 +/- 10.0V **TPD3:** 36.0 +/- 2.0V **TPD34:** 25.5 +/- 1.0V **TPD4:** 15.5 +/- 1.0V **TPD66:** 9.0 +/- 1.0V **TPD9:** 33.0 +/- 2.0V
AFC 1. TV einschalten. 2. Kanal im UHF-Bereich wählen. 3. Meßsender auf 38.9 MHz einstellen und an den Tuner-Testpunkt anschließen. 4. DVM an **TPB25** anschließen.	1. Spule **L106** so abgleichen, daß die Gleichspannung am **TPB25** 4.0V +/- 0.2V beträgt. 2. Die Frequenz ändern, und die Spannung wie folgt kontrollieren: + 100 kHz: Kleiner als 2.0V - 100 kHz: Größer als 6.0V
RF AGC 1. Empfang eines Farbbalken - Testbildes. 2. Das Eingangssignal soll mit 60dB +/- 2dB (75 Ω eingespeist werden). 3. Oszilloskop an **TPB24** in DC-Funktion anklemmen.	1. Der Regler RF AGC **R128** ist auf Rechtsanschlag zu stellen. 2. Den Regler **R128** so einstellen, daß er kurz vor dem Punkt steht, an dem der Messwert an **TPB24** absinkt.
HOCHSPANNUNG. 1. TV einschalten. 2. Die regler wie folgt einstellen: Helligkeit ..... minimum Kontrast ..... minimum Grundhelligkeitsregler . minimum (Nullstrahlstrom)	1. Die Hochspannung darf bei 29.0kV eine Toleranz von (+0.7 / - 1.5)kV. **Anmerkung:** Falls die Hochspannung außerhalb der Toleranz liegt, bitte bei minimaler Helligkeit, Kontrast und Farbsättigung prüfen, ob sie innerhalb der Toleranz ist.
VIDEOTEXT-CLOCK-OSZILLATOR 1. TV einschalten und Betriebsspannung B prüfen. 2. **TPH3** auf Masse klemmen. 3. Frequenzzähler an **TPH4** anschließen.	1. **C3528** einstellen. Ablesung des Zählers : 6.01 MHz +/- 5kHz. 2. Die Kurzschlussbrücke entfernen.
RAUSCHUNTERDRÜCKUNG 1. TV einschalten. 2. Frequenzzähler an **TPB19** anschließen.	1. **R186** einstellen Ablesung des Zählers : 15.575kHz +/ - 100 Hz.
PILOT TONTRÄGER 1. Stereo - Signal empfangen. 2. Oszilloskop an **TPB18.**	1. Mit **L2201** und **R2209** die Sinusamplitude auf Maximum einstellen. 2. Oszilloskop an **TPB17** anklemmen und von Stereo auf Multiplex umschalten. 3. **L2201** und **R2210** auf Maximum der Sinusamplitude justieren. **Anmerkung:** Die Einstellung von **L2201** muß sowohl bei Stereo wie auch Multiplex die maximale Sinusamplitude ergeben!
KANALTRENNUNG 1. Stereo - Signal empfangen. Rechten Kanal mit 40 % 1kHz modulieren. Linker Kanal ohne Modulation. 2. Oszilloskop an **TPB33** anklemmen.	1. **R2224** so einstellen daß das Übersprechen vom rechten zum linken Kanal **TPB33** zum Minimum wird.

ITEM/PREPARATION	ADJUSTMENT PROCEDURE	WAVEFORM
SUB CONTRAST 1. Receive the Philips pattern. (Input level : 75 dB.) 2. Connect an oscilloscope to **TPE15**. 3. Set controls: Bright ..... minimum Contrast ..... maximum Colour ..... minimum 4. Earth **TPE7**.	1. Adjust Sub-Bright **R321** to set the black level to 0.2 V. 2. Adjust the Sub-Contrast **R317** to set the drive voltage to 2.7 V 0-p. 3. Remove link from **TPE7**.	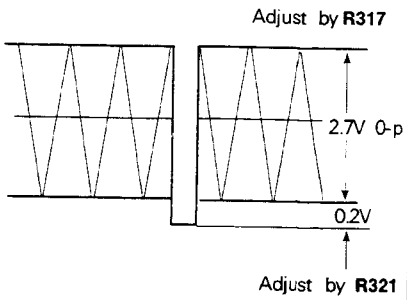 **Fig.9**
PAL APC 1. Receive the Philips pattern. 2. Connect a short jumper between **TPE76** and earth. 3. Connect oscilloscope to **TPE15**.	1. Adjust APC trimmer **C637** to obtain waveform at **TPE15** as shown in Fig.10. 2. Remove link and confirm colour bars are stationary.	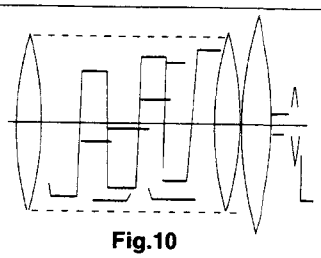 **Fig.10**
SUB COLOUR 1. Receive a PAL colour bar pattern. 2. Set controls: Bright ..... minimum Contrast ..... maximum Colour ..... centre 3. Connect a short jumper between **TPE6** and earth. 4. Connect an oscilloscope to **TPE15**.	1. Adjust sub colour **R606** for 1.6 Vp-p +/- 0.1 V at **TPE15** as shown in Fig 11. 2. Remove the short jumper.	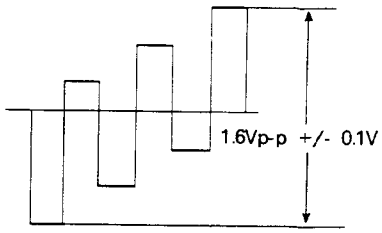 **Fig.11**
TELETEXT CONTRAST 1. Receive a teletext signal. 2. Connect an oscilloscope to **H1 pin 6.**	1. Adjust **R3514** for 2.5 Vp-p +/- 0.1V as shown in Fig 12. **Note:** If H1 is not connected to E-PCB, a 150Ω resistor has to be connected between H1 pin 6 and ground.	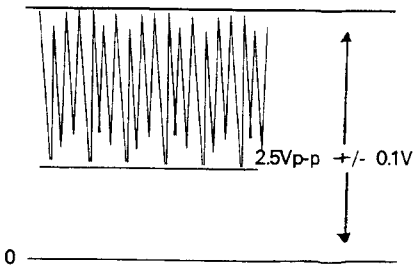 **Fig.12**
BELL FILTER 1. Receive a Philips pattern. (SECAM) 2. Connect an oscilloscope to **TPE69.** through a 10kΩ resistor. (10 : 1 probe)	1. Adjust **L600** to obtain the waveform as shown in Fig 13.	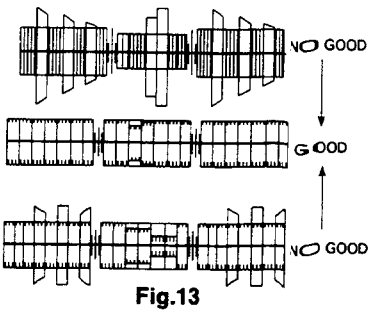 **Fig.13**

ABGLEICHPUNKTE UND VORBEREITUNG	JUSTIERUNG	SIGNALFORM
GRUNDKONTRAST 1. Empfang eines Farbbalken - Testbildes. 2. Oszilloskop an Testpunkt **TPE15.** 3. Die Regler wie folgt einstellen : Helligkeit ..... minimum Kontrast ..... maximum Farbsättigung ... minimum 4. **TPE7** auf Masse Klemmen	1. Grundhelligkeit **R321** auf 0.2V einstellen. 2. Grundkontrast **R317** auf 2.7 Vss einstellen. 3. Die Verbindung von **TPE7** entfernen.	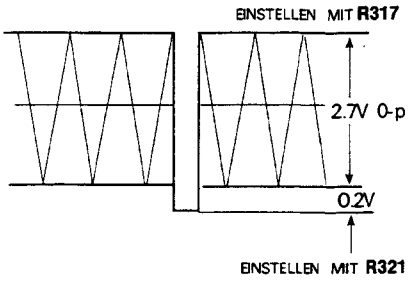 **Abb.9**
PAL APC 1. Empfang eines PAL - Farbbalkan - Testbildes. 2. **TPE76** auf Masse Klemmen. 3. Oszilloskop an **TPE15.**	1. Trimmer **C637** auf minimale Bewegung in den Farbbalken abgleichen (siehe Abb. 10) 2. Brücken entfernen und korrekte Farbbalkenfolge überprüfen.	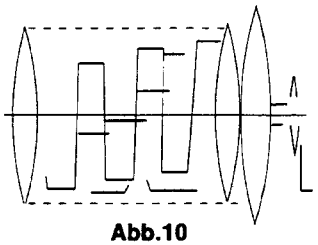 **Abb.10**
GRUNDFARBSÄTTIGUNG 1. Farbbalkentestbild empfangen. 2. Helligkeit. . . . . .minimum Kontrast . . . . . .maximum Farbsättigung . . . . . mittenstellung 3. **TPE6** auf Masse Klemmen. 4. Oszillograph an **TPE15** anschliesen.	1. An **TPE15** mit **R606** (SUB-COL.) 1.6Vss +/- 0.1 V einstellen. 2. Die Kurzschlussbrücke entfernen.	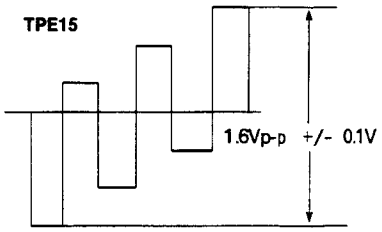 **Abb.11**
VIDEOTEXT-KONTRAST 1. Videotext signal empfangen. 2. Oszilloskop an **H1 pin 6.**	1. Mit **R3514** die Signalform nach Abb. 12 einstellen. **Hinweis:** Wenn H1 nicht mit der E-Platine verbunden ist, muß ein 150 Ω Widerstand zwischen H1 Pin 6 und Masse eingebaut werden.	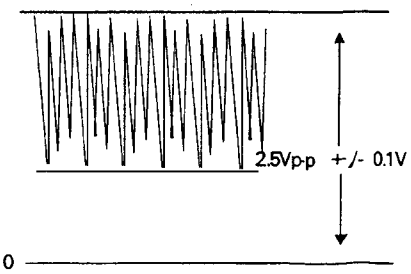 **Abb.12**
GLOCKENFILTER 1. Ein Secam FUBK-Testbild empfangen. 2. Ein Oszilloskop an über 10k Ω-Widerstand an **TPE69** anschließen. (Tester mit 10 : 1-Reduktion)	1. Mit dem **L600** die Signalform nach Abb. 13 einstellen.	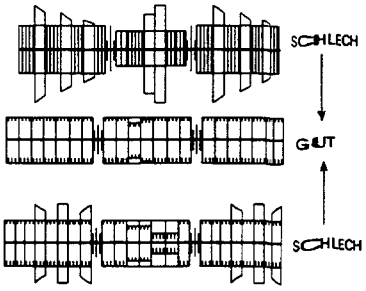 **Abb.13**

BLOCK DIAGRAM (VIDEO LINE)

BLOCKSCHALTBILD (VIDEO-SIGNALWEG)

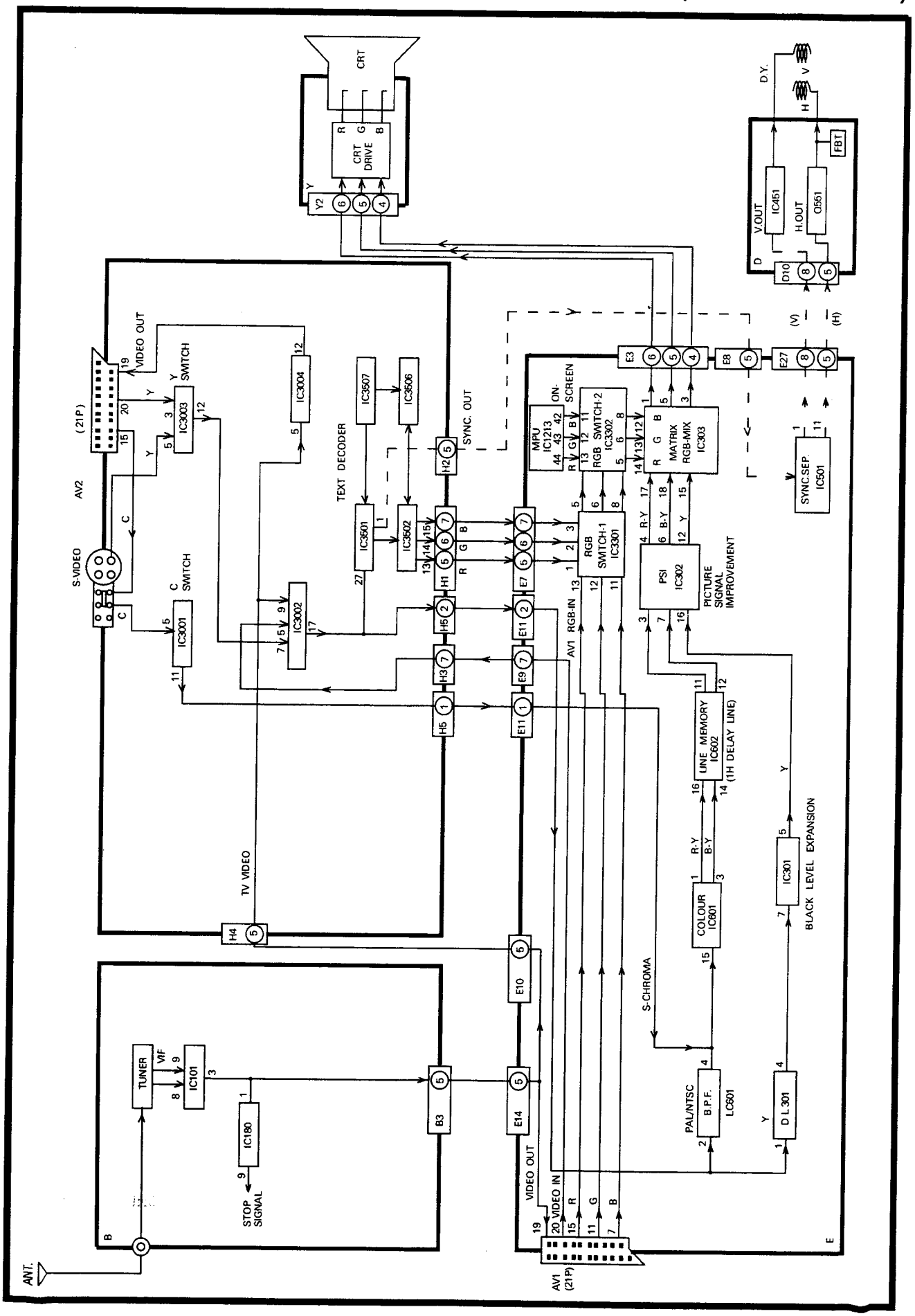

BLOCK DIAGRAM (AUDIO LINE)

BLOCKSCHALTBILD (AUDIO-SIGNALWEG)

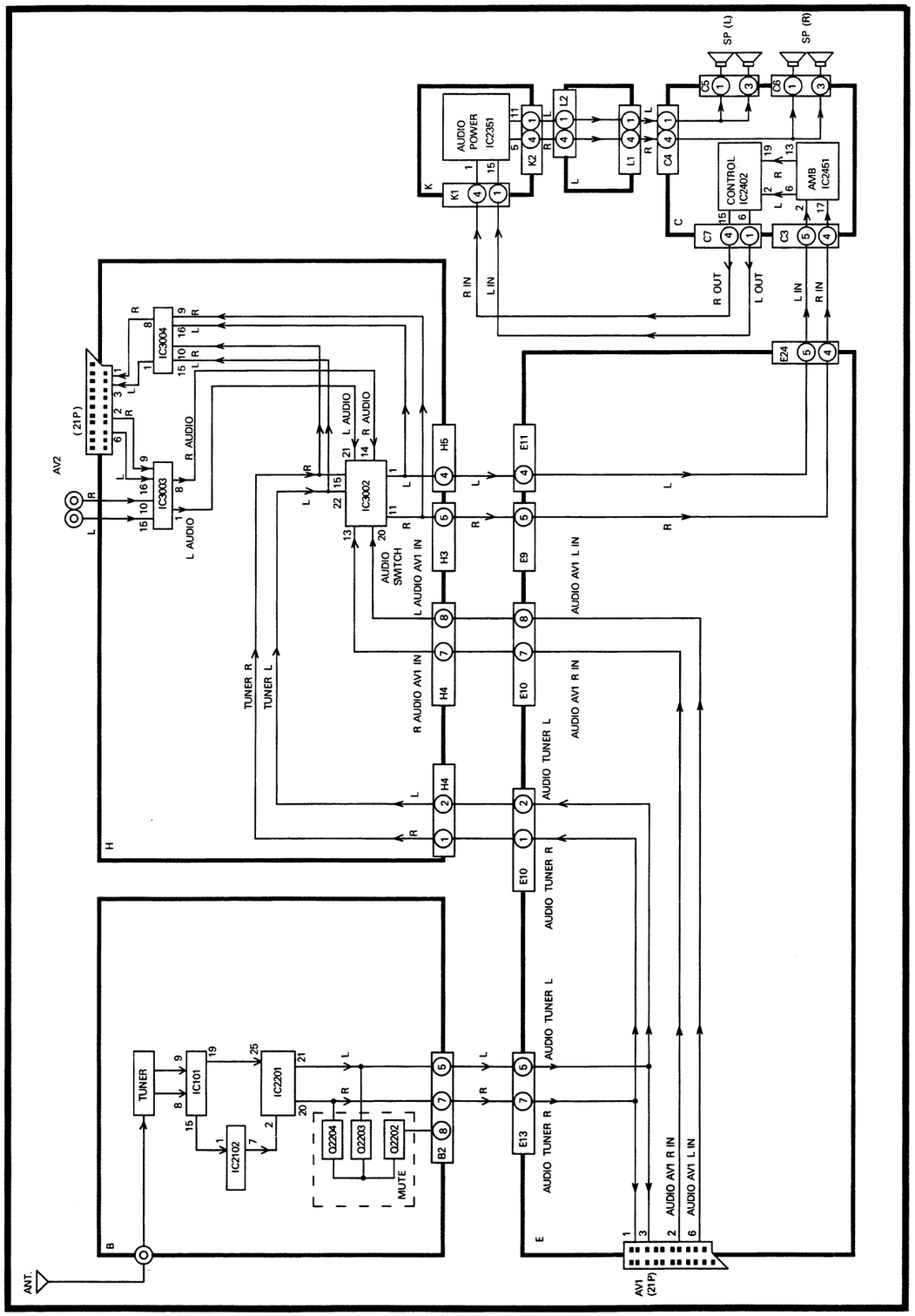

BLOCK DIAGRAM (POWER LINE)

BLOCKSCHALTBILD (SPANNUNGSVERSORGUNGSWEG)

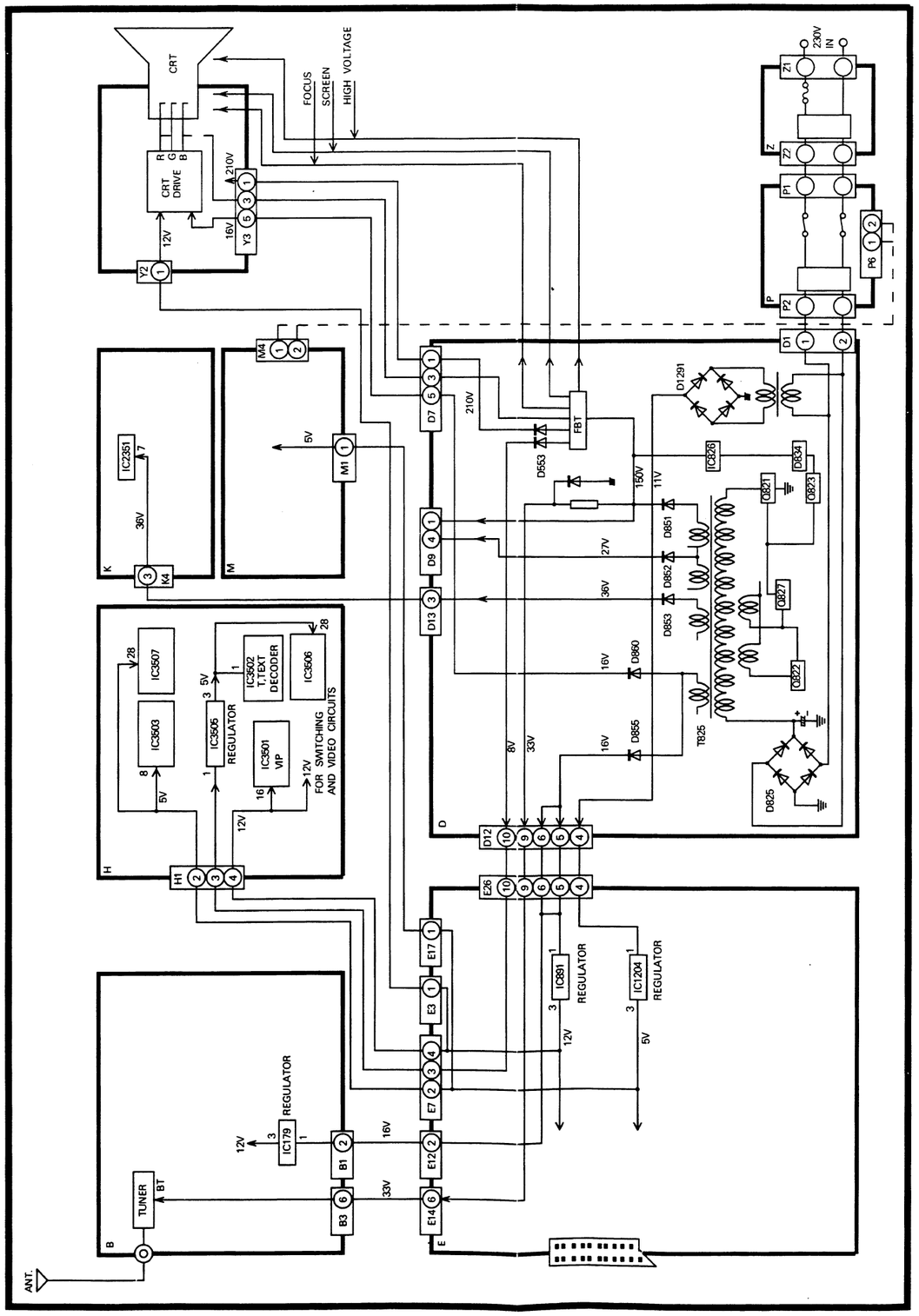

BLOCK DIAGRAM (MPU/CONTROL LINE)

BLOCKSCHALTBILD (MPU / KONTROLLSIGNALWEG)

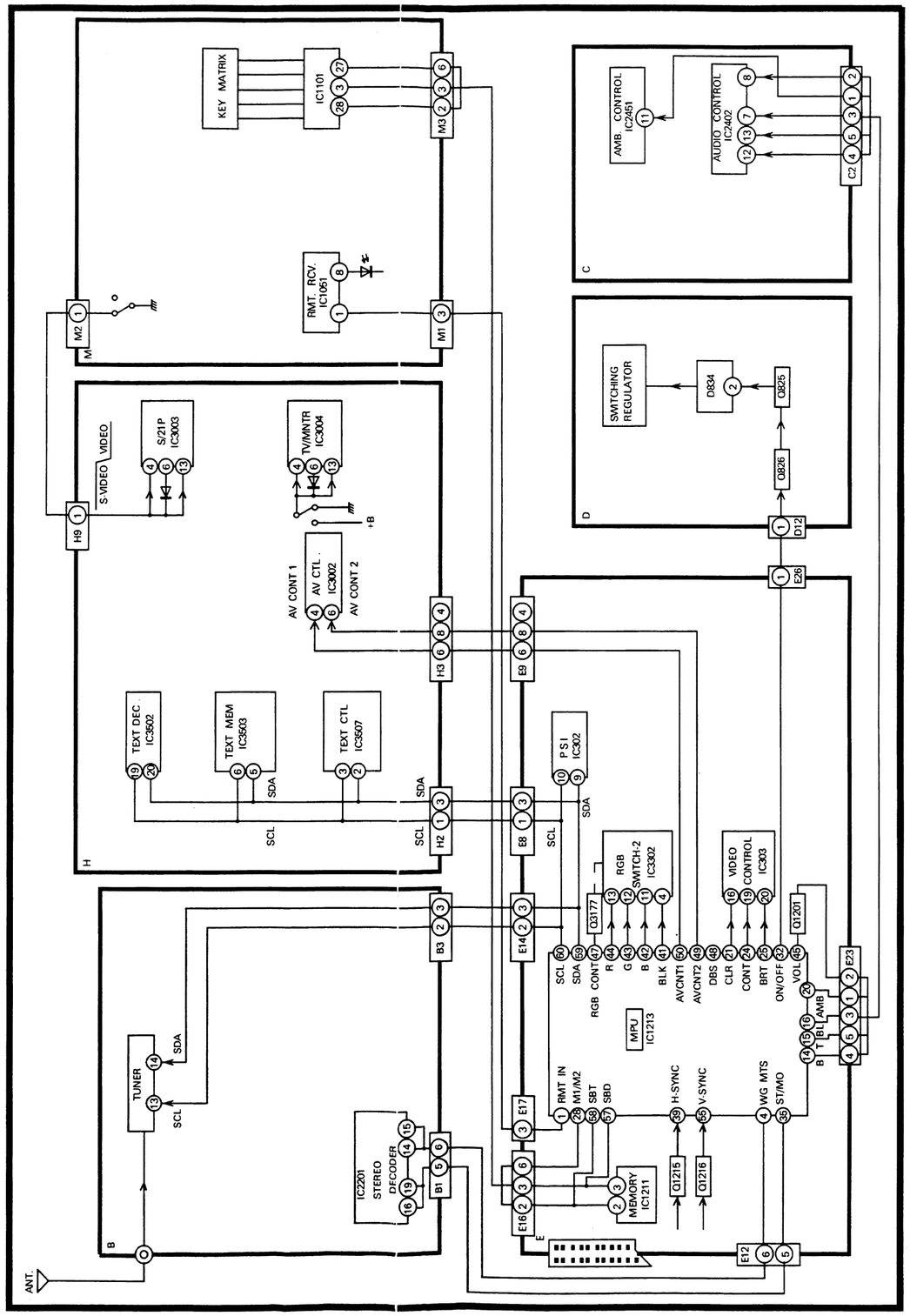

CONDUCTOR VIEWS

ANSICHT DER LEITERBAHNEN

E-BOARD TNP197064AG

PLATINE E TNP197064AG

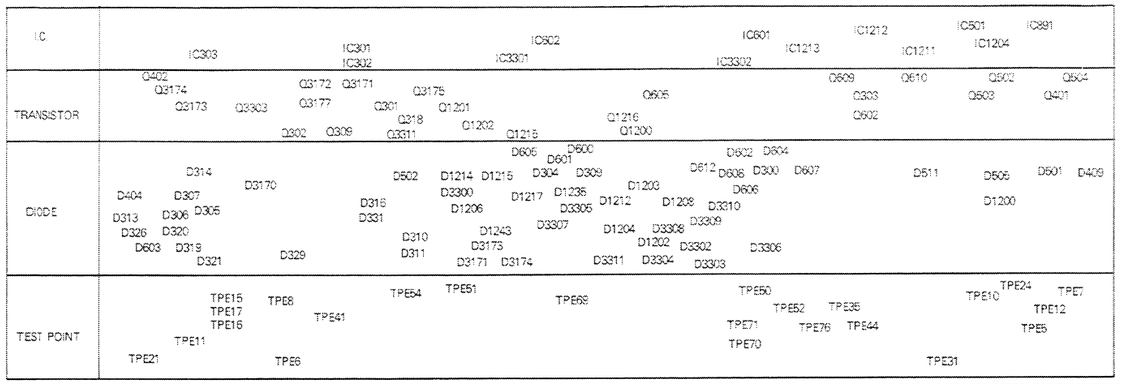

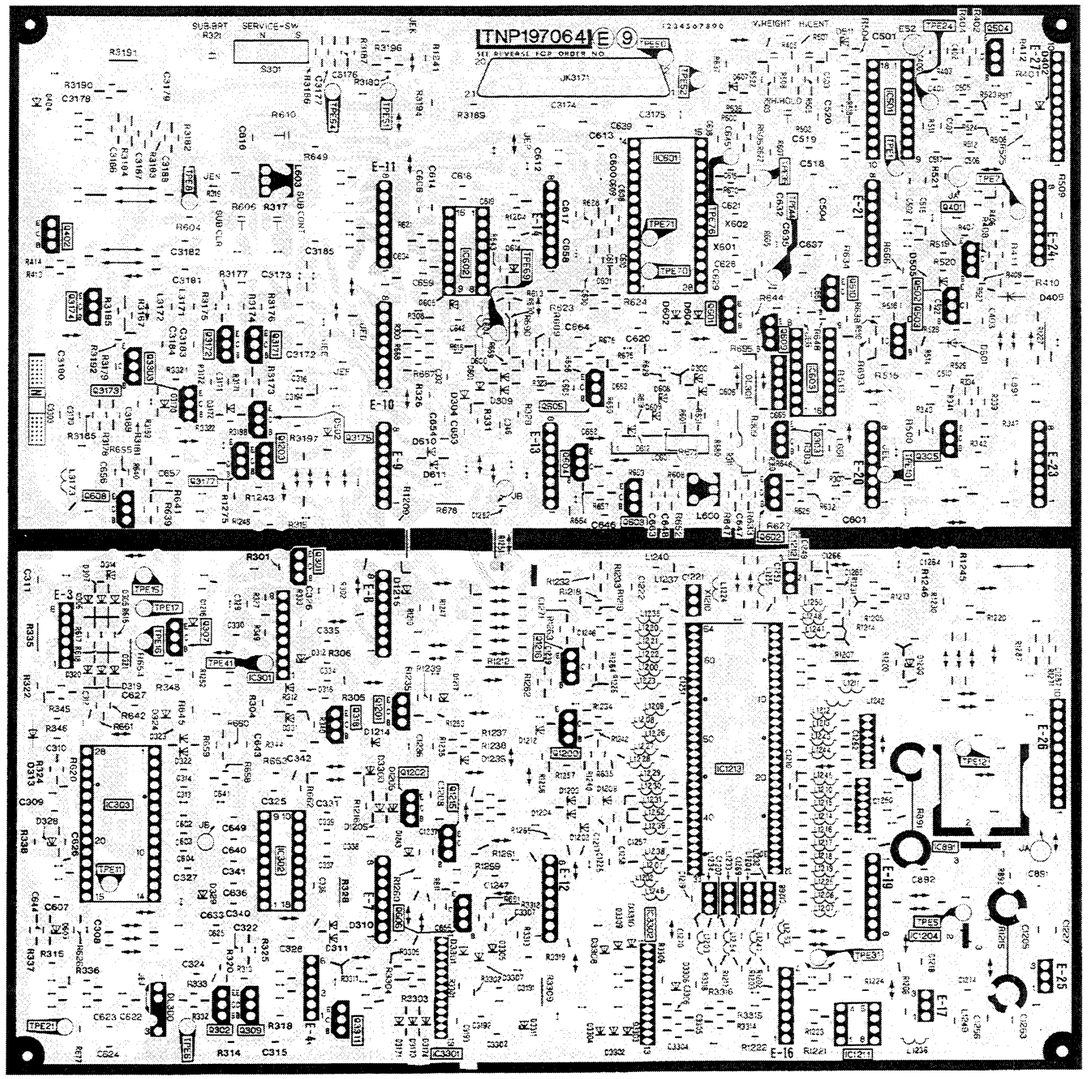

D-BOARD TNP107640AB

PLATINE D TNP107640AB

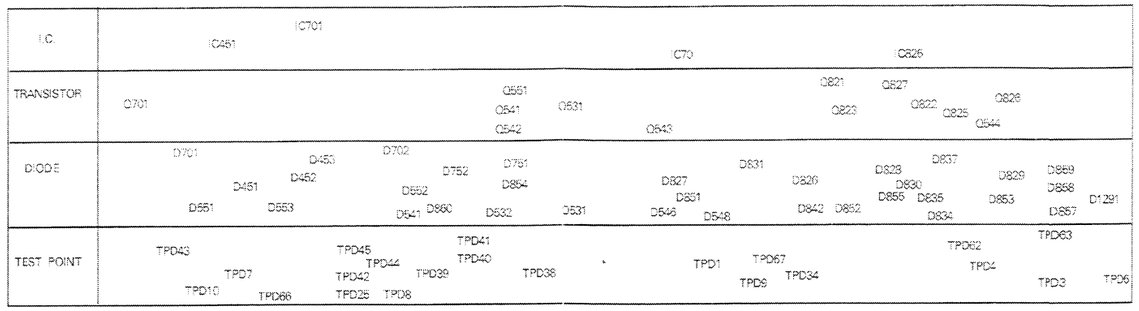

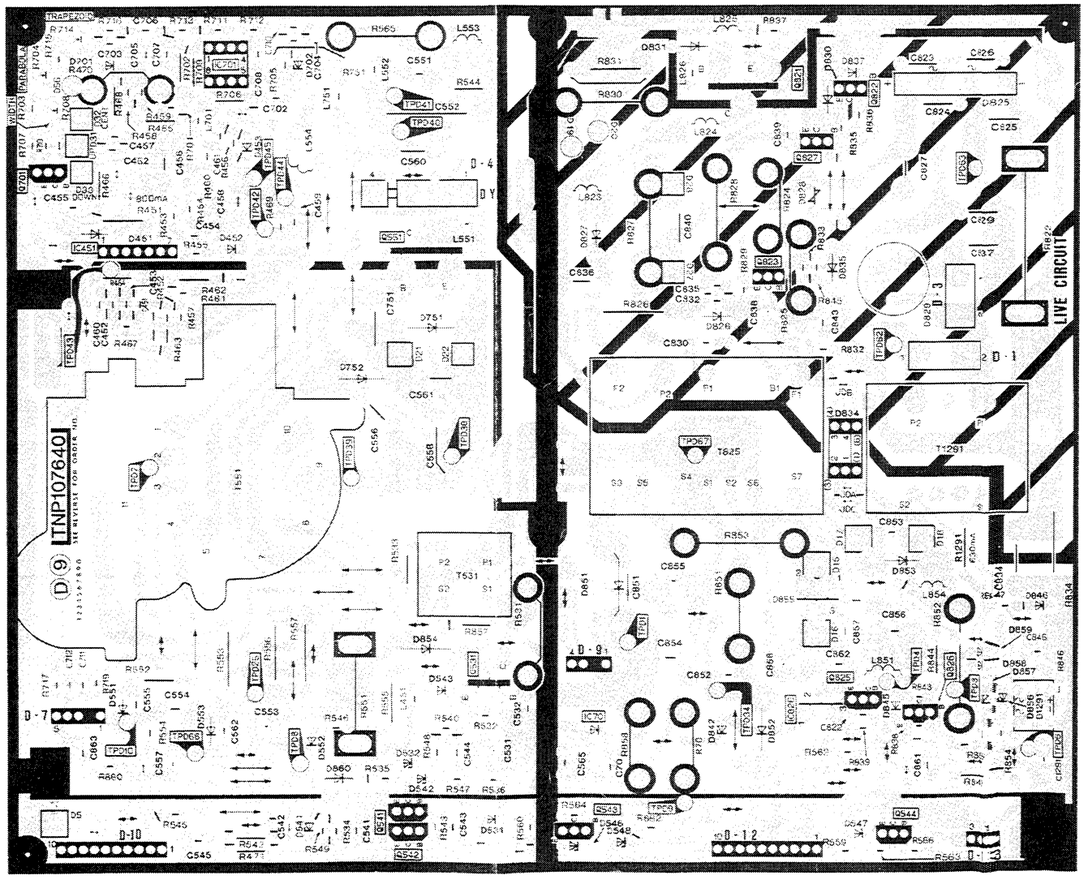

BAHNEN

197064AG

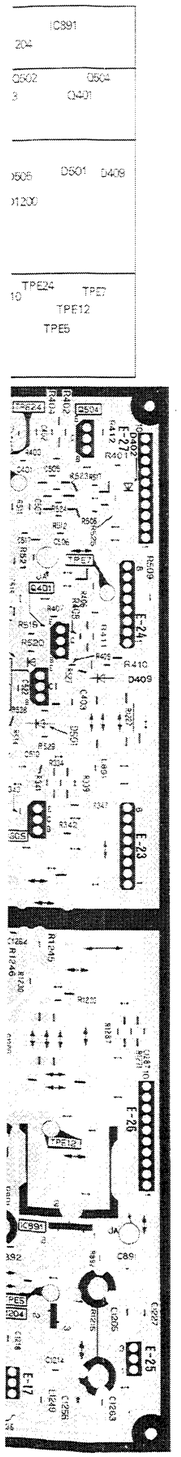

D-BOARD TNP107640AB

PLATINE D TNP107640AB

I.C.	IC701 IC451 IC70 IC826
TRANSISTOR	Q701 Q551 Q541 Q542 Q531 Q543 Q821 Q823 Q827 Q822 Q825 Q826 Q544
DIODE	D701 D453 D452 D451 D551 D553 D702 D752 D552 D541 D860 D751 D854 D532 D531 D827 D851 D546 D548 D831 D826 D842 D852 D828 D830 D855 D835 D834 D837 D829 D853 D859 D858 D857 D1291
TEST POINT	TPD43 TPD7 TPD10 TPD66 TPD45 TPD44 TPD42 TPD25 TPD8 TPD39 TPD41 TPD40 TPD38 TPD1 TPD67 TPD9 TPD34 TPD62 TPD4 TPD63 TPD3 TPD6

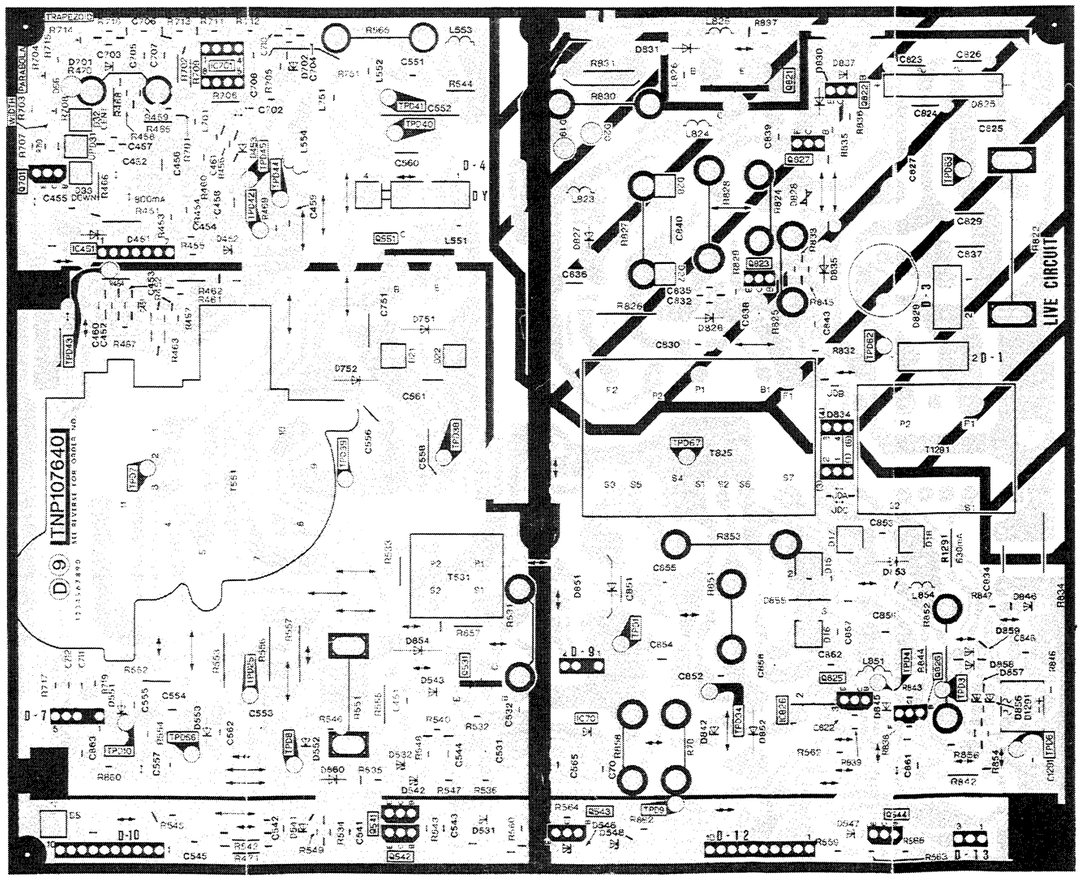

C-BOARD TNP107825

PLATINE C TNP107825

I.C.	IC2402 IC2403 IC2451
TRANSISTOR	Q2403 Q2407 Q2404
DIODE	D2405 D2406 D2401 D2451 D2261 D2260

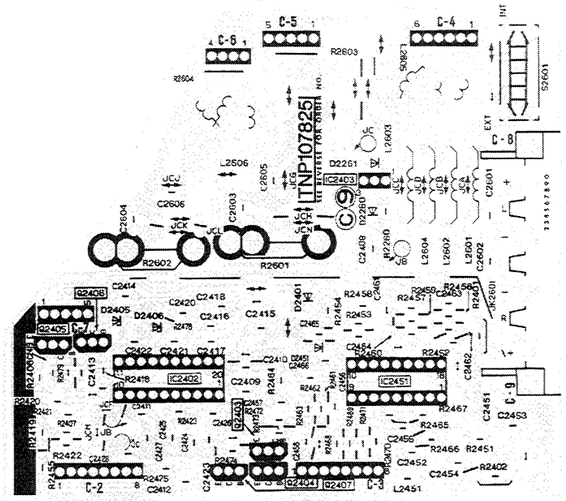

B-BOARD TNP107662

PLATINE B TNP107662

I.C.	TRANSISTOR	DIODE	TEST POINT
IC179			TPB21 TPB2
	Q2204	D171	TPB17
IC2201			TPB18
	Q2203 Q2202		
IC102			TPB42
	Q2201		TPB19 TPB8
	Q2103		
IC180	Q160		TPB3 TPB15
	Q101 Q130		TPB9
		D19 D132	TPB25
	Q2101		TPB20 TPB33
	Q131 Q2102		
			TPB37 TPB34
IC101			TPB12
			TPB1
			TPB14
			TPB24
	Q120		
			TPB11

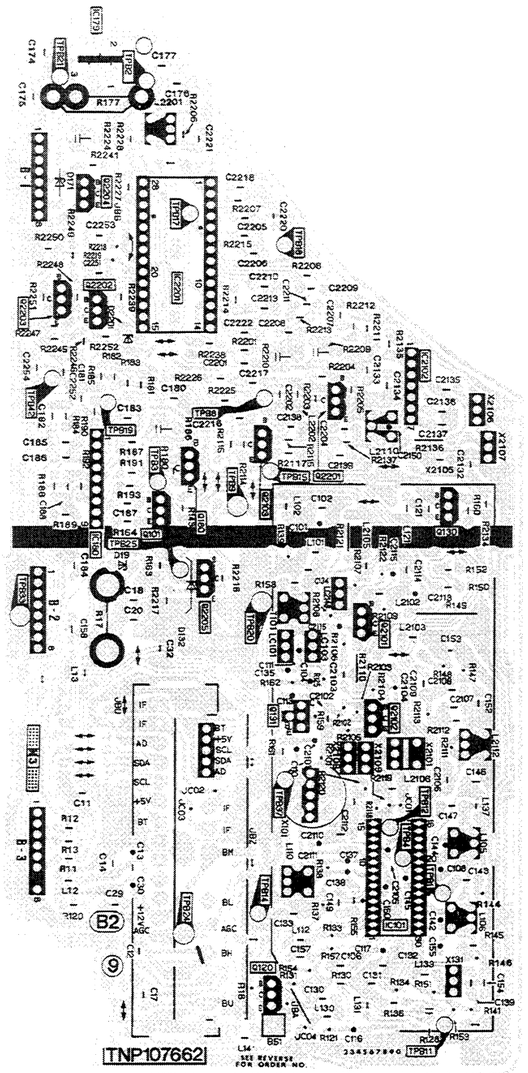

H-BOARD TNP107691AC

PLATINE H TNP107691AC

I.C.	IC3505 IC3503 IC3601 IC3506 IC3502 IC3501 IC3004 IC3002 IC3003 IC3001
TRANSISTOR	Q3601 Q3004 Q3005 Q3014 Q3001 Q3007 Q3008 Q3006 Q3516 Q3009 Q3501 Q3003 Q3504 Q3503 Q3505 Q3506 Q3502 Q3513 Q3515 Q3514 Q3010 Q3011
DIODE	D3508 D3543 D3602 D3502 D3516 D3517 D3542 D3541 D3540 D3528 D3501 D3529 D3530 D3002 D3003 D3009 D3007 D3006 D3004
TEST POINT	TPH12 TPH2 TPH4 TPH3 TPH1 TPH11 TPH14 TPH15 TPH13 TPH7 TPH8

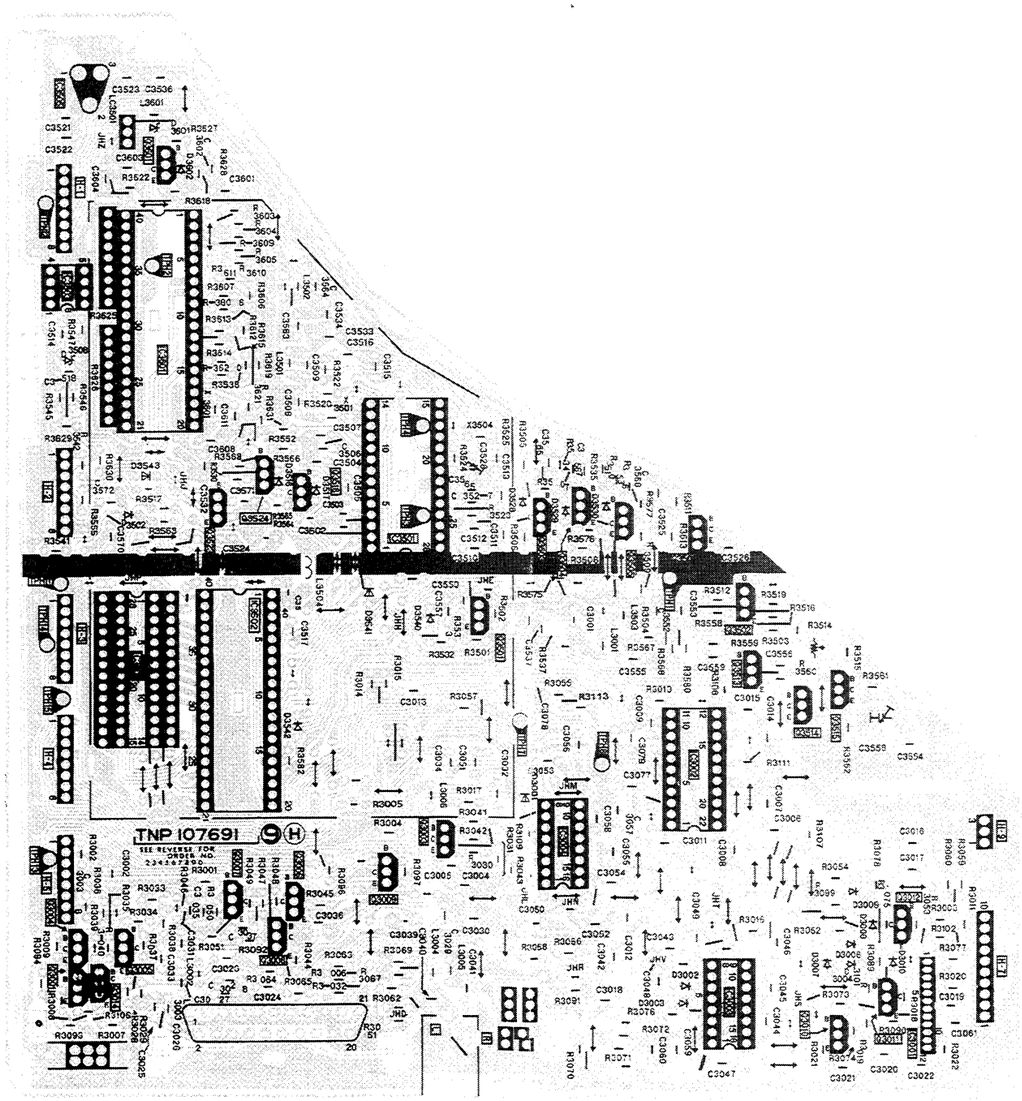

SELF CHECK

Self Check is a function for checking the Iic bus path through the TV and is displayed on the screen as five numbers, as shown below.
Although no DBS is present, the self check will still register OK, due to the link options on the microprocessor.

NUMBER	PATH
1.	Tuner
2.	DBS
3.	Teletext
4.	PSI
5.	Tuning / Memory

To select Self Check, press the local VOLUME DOWN button and the remote control OFF-TIMER button at the same time.
If the particular path is GOOD "OK" is displayed next to the number.
If the path is NO GOOD "__" is displayed.

SELBSTCHECK

Der Selbstcheck ist eine Funktion, um den Weg des Iic bus durch den Fernseher zu prüfen, und wird als 5-Teil- Check auf dem Bildschirm angezeigt. Auch wenn kein DBS vorhanden ist, wird beim Selbstcheck OK angezeigt. Dies ist zurückzuführen auf die verschiedenen Verbindungsvarianten des Mikroprozessors.

NUMMER	WEG
1.	Tuner
2.	DBS
3.	Teletext
4.	PSI
5.	Abstimmung / Memory

Um den Selbstcheck zu aktivieren, muß der Volume-Down-Knopf am Gerät und der Off-Timer-Knop auf der Fernbedienung gleichzeitig gedrückt werden. Wenn der entsprechende Weg in Ordnung ist, wird zu der entsprechenden Nr. "OK" angezeigt.
Wenn der Weg nicht in Ordnung ist, wird "__" angezeigt.

LOCATION OF P.C.B.

LAGE DER PLATINEN

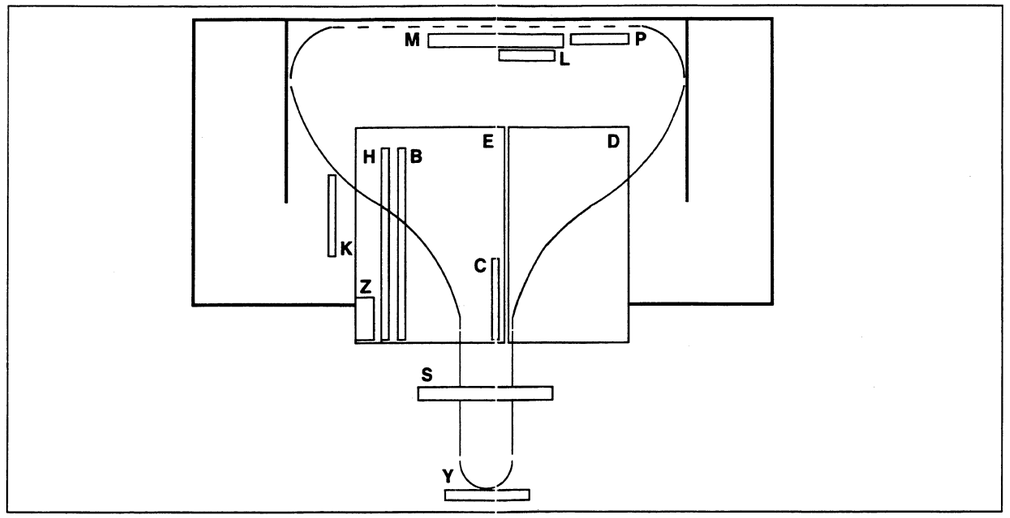

P.C.B	FUNCTION	SCHEM. PAGE No.
B	Tuner, VIF /SIF Stereo / Multi Decoder Sync. Detector	31
C	Ambience Sound Control Extension Speakers Speaker Out	33
D	Power Supply Vertical / Horizontal O/P	29
E	AV1 (21 Pin) Micro-Processor Main Video / Chroma Sync. Circuit RGB Switching	23
H	Main / Sub AV Switch Text Processor S-VHS (AV2) IN RCA Audio IN	26
K	Audio Amplifier	34
L	Headphone	22
M	R/Control Receiver Function Key	34
P	Power Switch	22
S	Velocity Modulation	21
Y	CRT Drive	33
Z	Mains Input	22

P.C.B	FUNKTION	SCHALTBILD SEITEN Nr.
B	Tuner, VIF /SIF Stereo / Multidecoder Synch. Detector	31
C	Ambience Klangregler Zusatzlautsprecher Lautsprecher Ausgang	33
D	Netzteil Vertikal / Horizontal O/P	29
E	AV1 (21 Pin) Micro-Prozessor Haupt- Video / Chroma Synch. Schaltung RGB Stufen	23
H	Haupt- und Zusatz AV Schalter Videotext Prozessor S-VHS (AV2) Eingang RCA Audio Eingang	26
K	Audio Verstärker	34
L	Kopfhörer	22
M	Fernbedienungs-Empfänger / Bedienungstasten	34
P	Netzschalter	22
S	Beschleuniger	21
Y	Bildröhrenansteuerung	33
Z	Haupteingänge Anschlüsse	22

SCHEMATIC DIAGRAM FOR MODEL TX-28W2C / 25W2C TX-28W2CI / 25W2CI (Alpha-3 Chassis)

ZEICHENERKLÄRUNG FÜR MODELL TX-28W2C / 25W2C TX-28W2CI / 25W2CI (Alpha-3 Chassis)

Important Safety Notice

Components identified by ⚠ mark have special characteristics important for safety. When replacing any of these components, use only manufacturer's specified parts.

Wichtiger Sicherheitsinweis

Teile,die mit einen Hinweis ⚠ gekennzeichnet sind, sind wichtig für die Sicherheit. Sollte ein Auswechseln erforderlich sein, sind unbedingt Originalteile einzusetzen.

NOTES:

1. RESISTOR
   All resistors are carbon 1/4W, unless marked as follows:
   Unit of resistance is the OHM (K =1,000, M = 1,000,000).
   - O : Nonflammable
   - ⊠ Metal Oxide
   - △ : Solid
   - ◎ : Metal Film
   - ⊠ : Wire Wound
   - ⊗ : Fuse
2. CAPACITORS
   All capacitors are ceramic 50V, unless marked as follows:
   Unit of capacitance is uF, unless otherwise stated.
   - ⊗ : Temperature Compensation
   - : Electrolytic
   - NP : Bipolar
   - Ⓜ : Polyester
   - ⓜ : Metalized Polyester
   - Ⓣ : Dipped Tantalum
   - ⊠ : Polypropylene
   - Ⓩ : Z-Type
3. COIL
   Unit of inductance is uH, unless otherwise stated.
4. Components marked ' L' on the schematic diagram shows lead - less parts.
5. TEST POINT
   ● : Test Point position.
6. EARTH SYMBOL
   : Chassis Earth (Cold) ⊥ : Line Earth (Hot)
7. VOLTAGE MEASUREMENT
   Voltage is measured by a DC voltmeter.
   Conditions of the measurement are the following:
   Power Source .....230V AC, 50Hz
   Receiving signal ..... Colour Bar signal (RF)
   All the other customer's controls..... Maximum
8. This schematic diagram is the latest at the time of printing and subject to change without notice.

REMARKS:

1. The Power Circuit contains a circuit area which uses a separate power supply to isolate the earth connection. The circuit is defined by HOT and COLD indications in the schematic diagram. Take the following precautions. All circuits,except the Power Circuit, are cold.

PRECAUTIONS

a. Do not touch the hot part or the hot and cold parts at the same time as you are liable to a shock hazard.
b. Do not short-circuit the hot and cold circuits as electrical components may be damaged.
c. Do not connect an instrument, such as an oscilliscope, to the hot and cold circuits simultaneously, as this may cause fuse failure. Connect the earth of instruments to the earth connection of the circuit being measured.
d. Make sure to disconnect the power plug before removing the chassis.

2. The following resistors are fusable safety components,they are rated at the following value.

Ref:	Part No:	Value:
R451	TSF19801	800mA
R555	TSF19102	1A
R1291	TSF19631	630mA

ANMERKUNG

1. WIDERSTÄNDE
   Alle 1/4 Watt Widerstände sind Kohlewiderstände, Abweichungen sind wie folgt gekennzeichnet:
   Die Maßeinheit ist OHM (Ω) (K =1,000 M =1,000,000).
   - O : nicht brennbar
   - ⊠ : Metal Oxyd
   - △ : Lastwiderstand
   - ◎ : Metall Film
   - ⊠ : Draht
   - ⊗ : Sicherung
2. KONDENSATOREN
   Alle Kondensatoren sind Keramikausfürungen.
   Spannungsfestigkeit 50 V, Abweichungen sind wie folgt gekennzeichnet.
   Die Maßeinheit ist uF, wenne keine anderen Bezeichnungen gennant sind.
   - ⊗ : Temperatur Kompensation
   - : Elektrolyt
   - NP : Bipolar
   - Ⓜ : Polyester
   - ⓜ : Metallisches Polyester
   - Ⓣ : Tantal
   - ⊠ : Polypropylen
   - Ⓩ : Z-Typ
3. SPULEN
   Die Maßeinheit ist uH, Abweichungen sind gekennzeichnet.
4. Mit 'L' gekennzeichnete Teile sind ohne Anschlußdrähte.
5. TESTPUNKTE
   ● : Kennzeichnung der Testpunktposition.
6. MASSESYMBOL
   : Erdung am Chassis (kalt) ⊥ : Erdung an Masse-Leitung
7. SPANNUNGSMESSUNG
   Spannungsmessungen sind mit einem DC-Voltmeter durchzuführen.
   Die Meßbedingungen sind folgende:
   Netzspannung ..... 230 V / 50 Hz
   Wiedergabe Signal ..... Farbbalken - Testbild
   Alle übrigen Einstellungen für Benutzer ..... Sollangaben
8. Änderungen im Laufe der Fertigung sind möglich.

BEMERKUNGEN:

Das Schaltnetzteil enthält Bereiche, die direkt mit dem Netz verbunden sind. Diese Bereiche sind im Schalplan mit "HOT" gekennzeichnet. Alle anderen Schaltungen sind mit "COLD" gekennzeichnet und Haben keine direkte Verbindung mit dem Netz.

Für den netzverbundenen Bereich ("HOT") sind folgende Vorsichtsmassregeln zu beachten :

a. Weder die Leitungen im heißen noch Leitungen im heißen und im kalten Bereich gleichzeitig berühren. Es besteht die Gefahr eines elektrischen Schlages.
b. Keinesfalls die Leitungen im heißen Bereich mit denen im kalten Bereich verbinden oder kurzschliessen. Dies kann zur Zerstörung von Bauteilen oder Sicherungen führen. Außerdem ist die elektrische Betriebssicherheit des Gerätes nicht mehr gegeben.
c. Kein Messinstrumente gleichzeitig an Leitungen im heissen und kalten Bereich anschliessen. Sicherungen könnten zerstört werden. Die Erde des Messinstrumentes immer mit der des zu prüfenden Schaltkreises verbinden.
d. Vor Ausbau des Chassis, Stecker aus der Netzsteckdose ziehen.

2. Die nachfolgenden Widerstände sind Sicherungswiderstände. Im Falle eines Defektes dürfen nur Originalersatzteile verwendet werden.

Pos.Nr:	Eratzteil-NR:	Wert:
R451	TSF19801	800mA
R555	TSF19102	1A
R1291	TSF19631	630mA

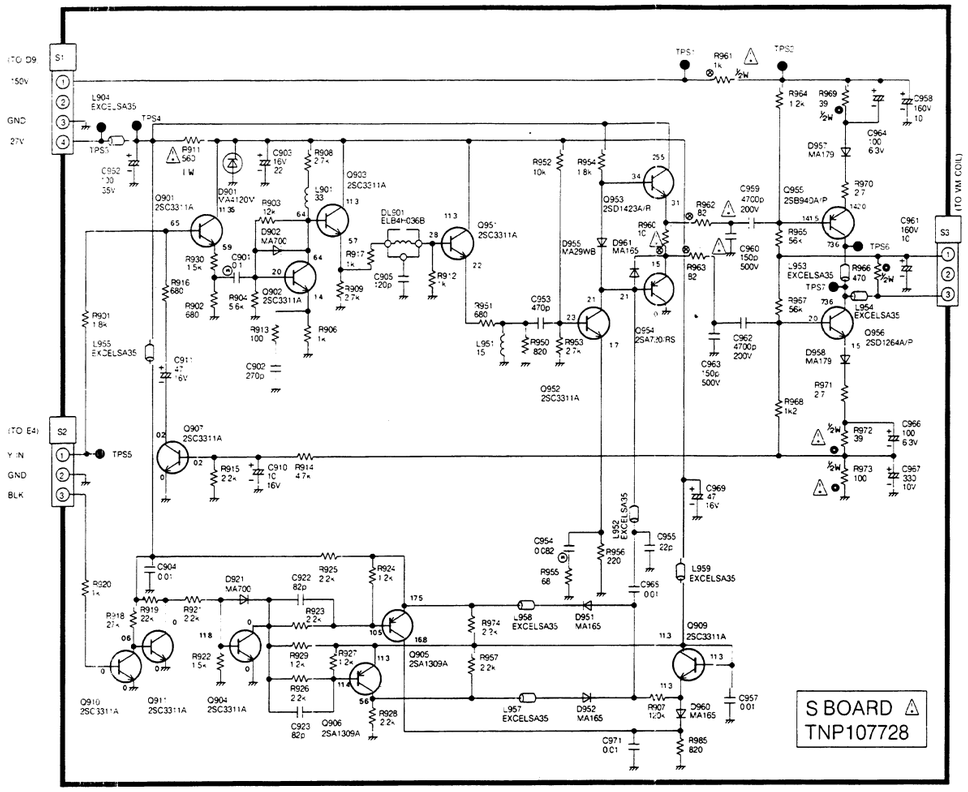

UV816 / PLL

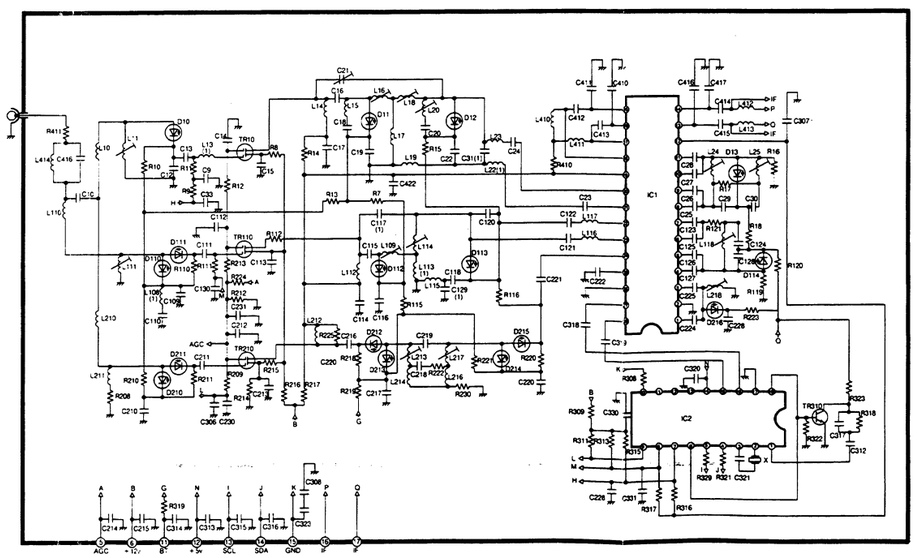

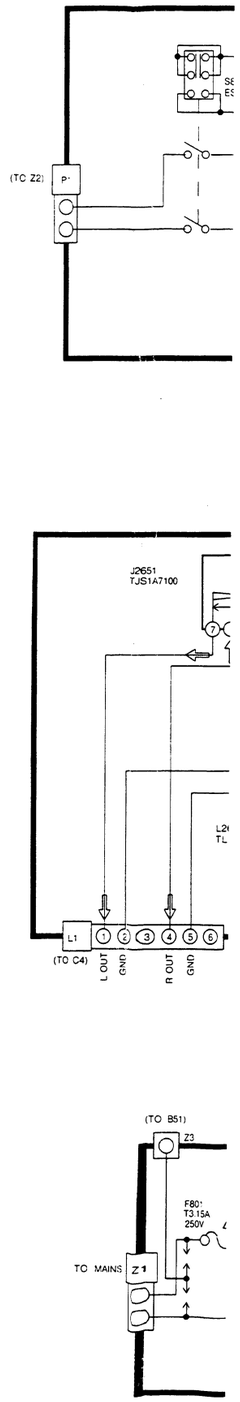

hungen

l Oxyd
ll Film
erung

gennant

trolyt
lar
al
p

asse-Leitung

zuführen.

/ / 50 Hz
Testbild
angaben

bunden
nnet. Alle
ben keine

im kalten
ektrischen

en Bereich
Bauteilen
ossicherheit

d kalten
Die Erde
tkreises

en.

Im Falle
en.

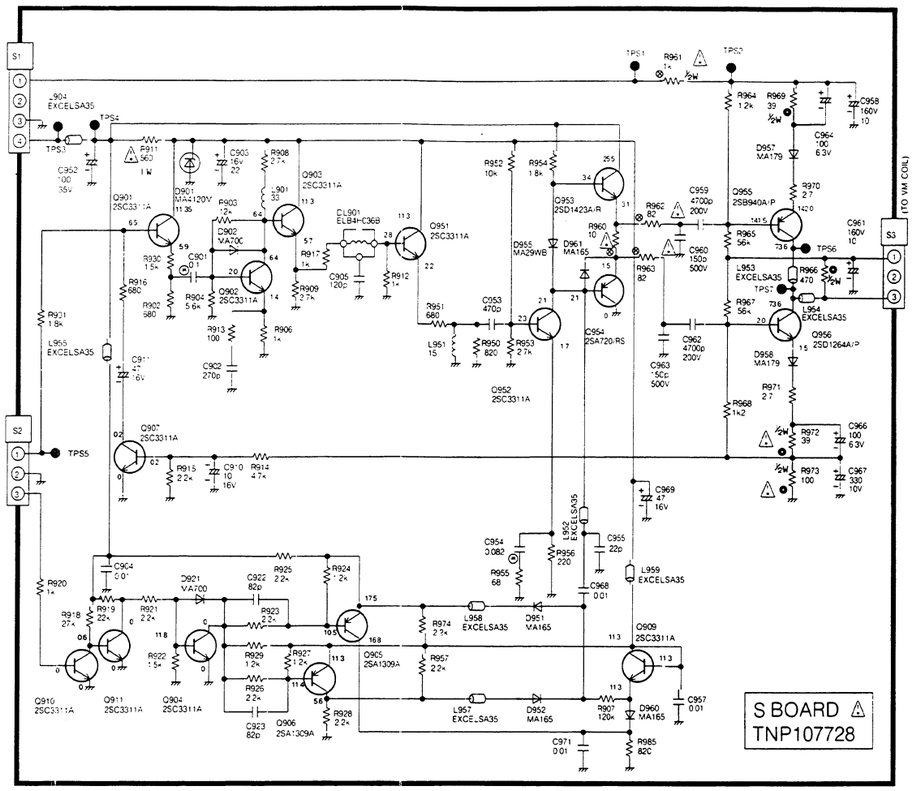

UV816 / PLL

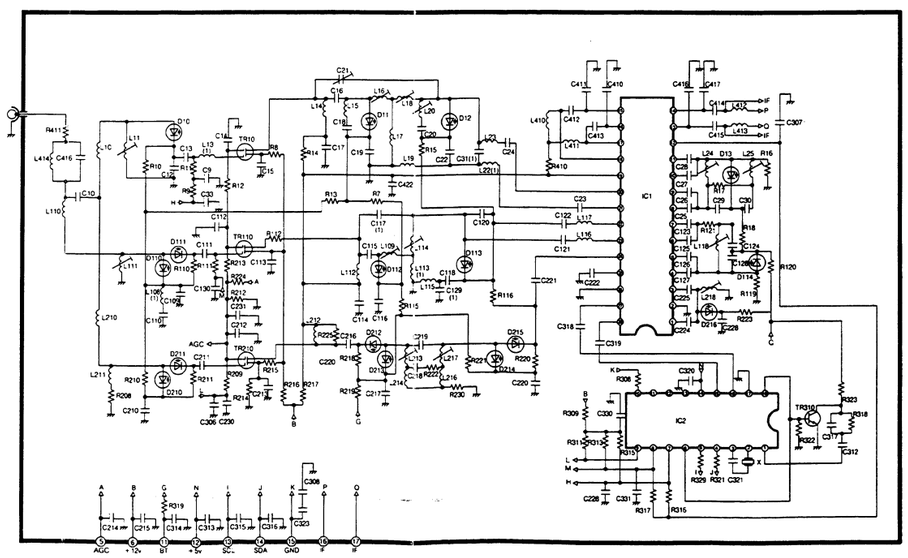

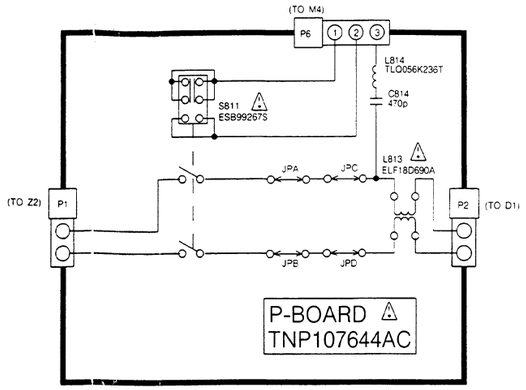

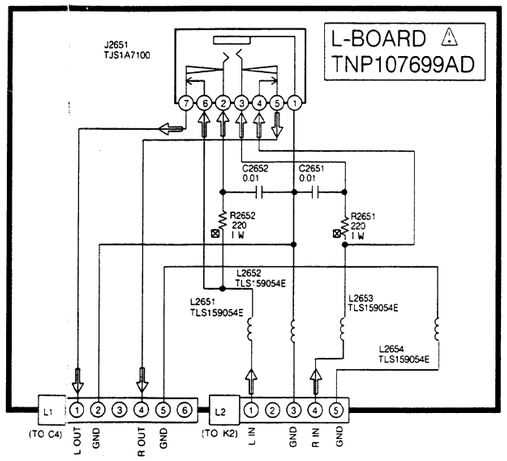

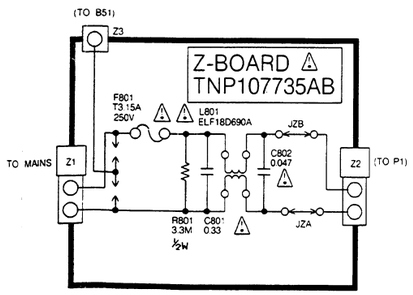

WAVEFORM PATTERN TABLE
SIGNAL TABELLE

1 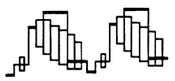 2.8Vp-p (20uS)	2 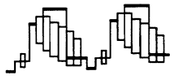 2.5Vp-p (20uS)	3 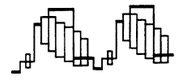 2.5Vp-p (20uS)
4 0.4Vp-p (20uS)	5 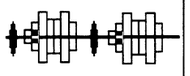 1.2Vp-p (20uS)	6 3Vp-p (20uS)
7 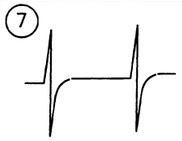 2.4Vp-p (5mS)	8 26Vp-p (5mS)	9 45Vp-p (5mS)
10 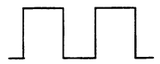 6.4Vp-p (20uS)	11 15Vp-p (20uS)	12 1500Vp-p (20uS)
13 112Vp-p (20uS)	14 0.7Vp-p (5mS)	15 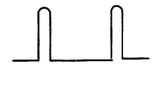 22Vp-p (20uS)
16 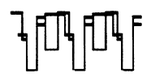 3.2Vp-p (20uS)	17 3.2Vp-p (20uS)	18 3.2Vp-p (20uS)
19 115Vp-p (20uS)	20 120Vp-p (20uS)	21 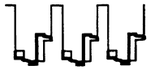 130Vp-p (20uS)

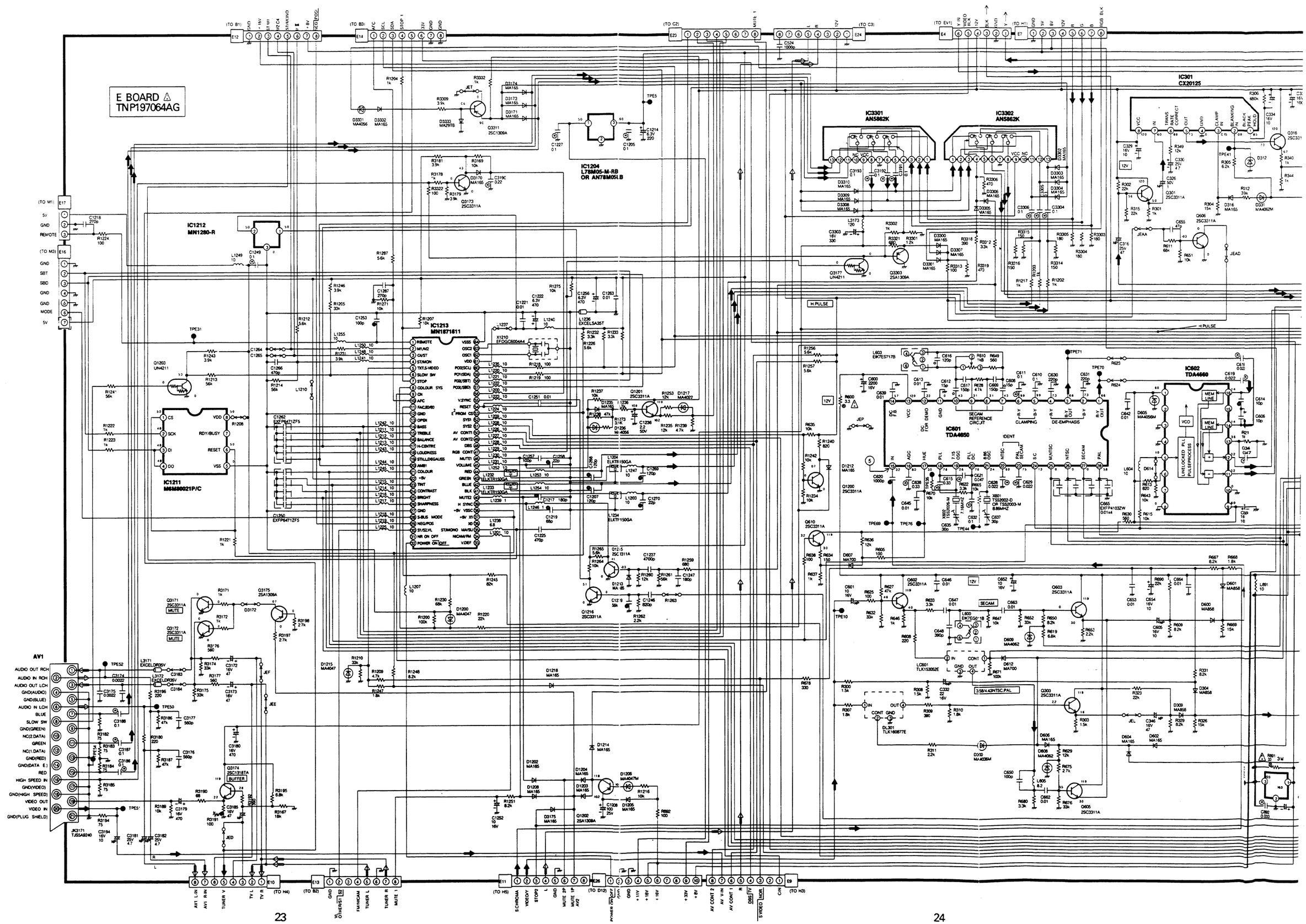
E BOARD
TNP197064AG
IC1212
MN1280-R
IC1204
L78M05-M-RB
OR AN78M05LB
IC1213
MN1871611
IC1211
M6M80021P/C
IC3301
AN5862K
IC3302
AN5862K
IC301
CX20125
IC601
TDA4650
IC602
TDA4660
AV1
23
24

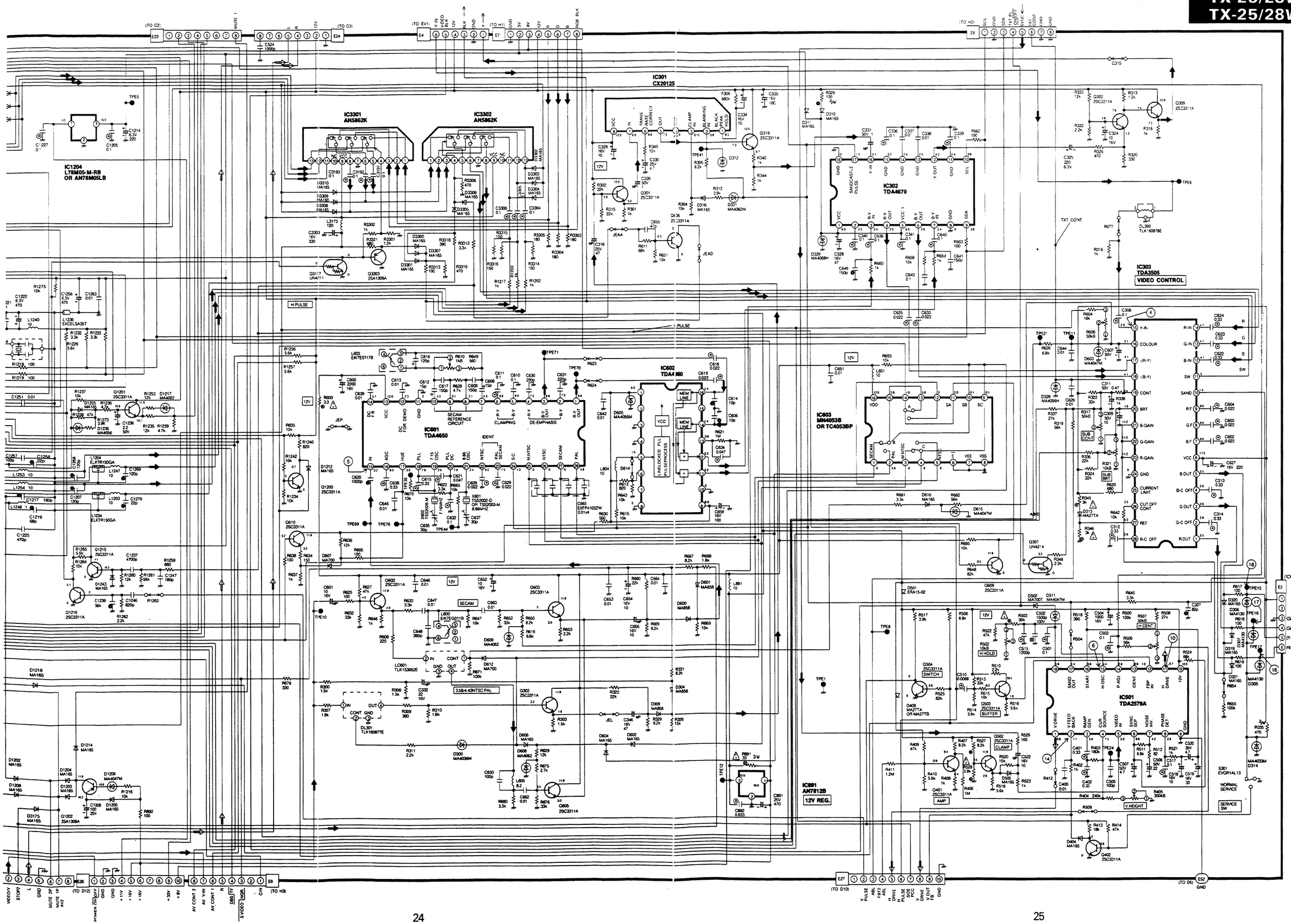
IC1204
L78M05-M-RB
OR AN78M05LB
IC3301
AN5862K
IC3302
AN5862K
IC301
CX20125
IC302
TDA4670
IC303
TDA3505
VIDEO CONTROL
IC601
TDA4650
IC602
TDA4660
IC603
MN4053B
OR TC4053BP
IC501
TDA2579A
IC891
AN7812B
12V REG.
H PULSE
SECAM REFERENCE CIRCUIT
CLAMPING
DE-EMPHASIS
SECAM
3.58/4.43NTSC PAL
SWITCH
BUFFER
CLAMP
AMP
H HOLD
H CENT
V HEIGHT
SUB CONT
SUB BRT
COLOUR
CURRENT LIMIT
CUT OFF CONT
REF
R-C OFF
SAND
R.F
G.F
B.F
VCC
B.OUT
B-C OFF
G.OUT
G-C OFF
R.OUT
NORMAL SERVICE
SERVICE SW
GND
GREEN
BLUE
RED

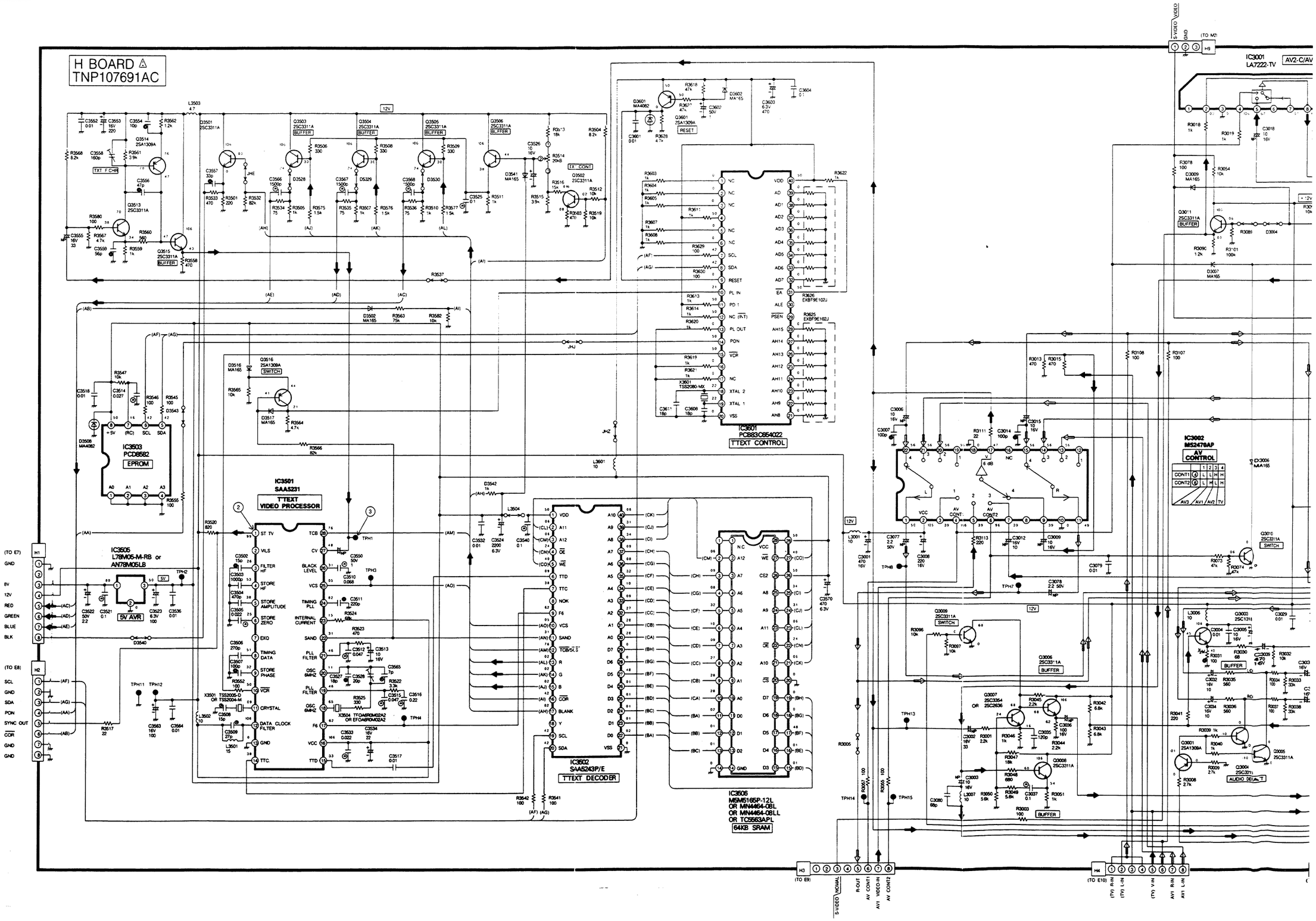
H BOARD ⚠
TNP107691AC
IC3501
SAA5231
T'TEXT
VIDEO PROCESSOR
IC3502
SAA5243P/E
T'TEXT DECODER
IC3601
PCB83C654022
TTEXT CONTROL
IC3603
PCD8582
EPROM
IC3505
L78M05-M-RB or
AN78M05LB
5V AVR
IC3506
M5M5165P-12L
OR MN4464-08L
OR MN4464-08LL
OR TC5563APL
64KB SRAM
IC3001
LA7222-TV
AV2-C/AV
IC3002
M52470AP
AV
CONTROL
(TO E7)
(TO E8)
(TO E9)
(TO E10)
S-VIDEO (NONA)
R-OUT
AV CONT1
AV1 VIDEO-IN
AV CONT2
AV1 R-IN
AV1 L-IN

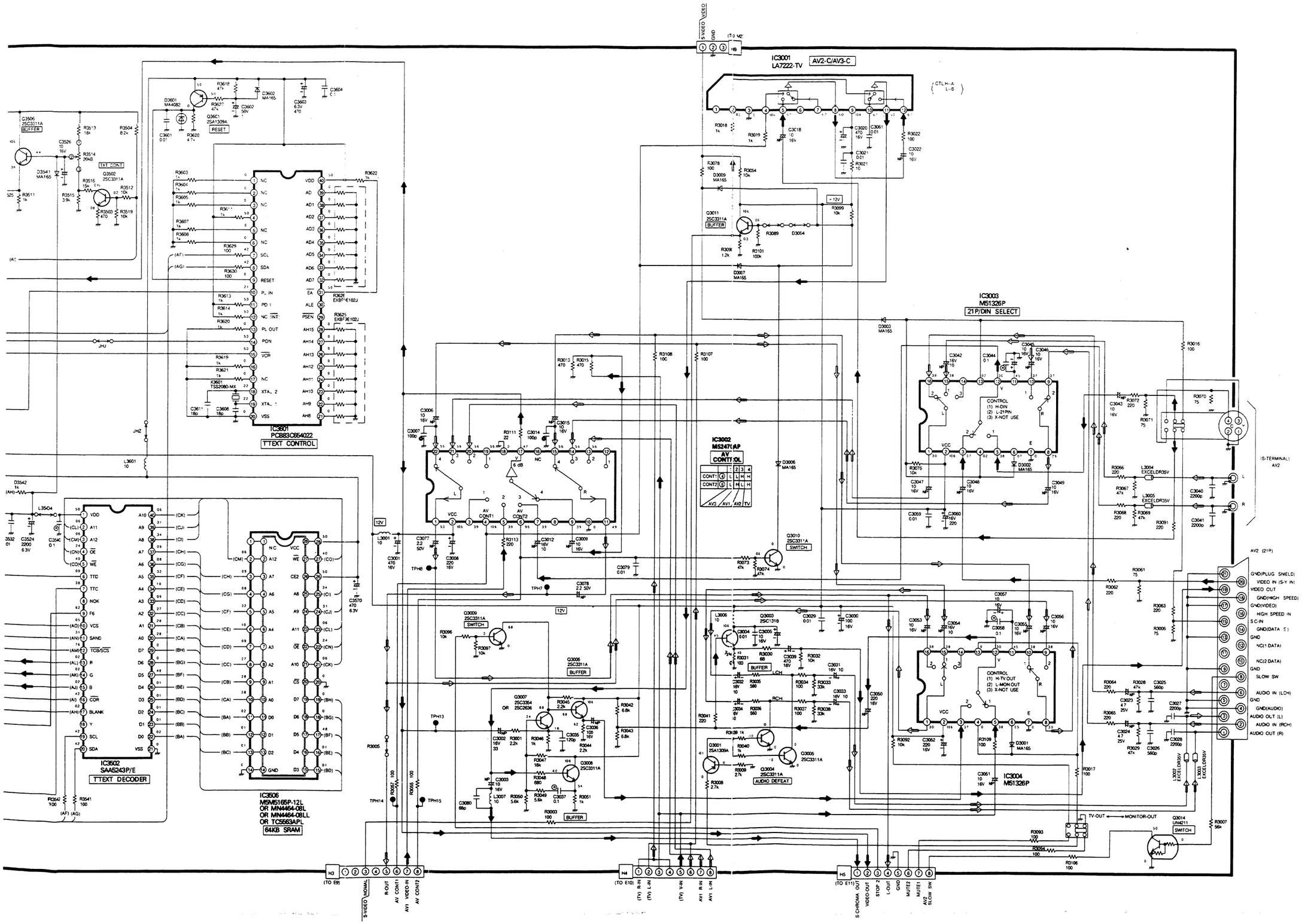
IC3001
LA7222-TV
AV2-C/AV3-C
IC3003
M51326P
21P/DIN SELECT
IC3002
M5247(AP
AV CONTROL
IC3501
PCB83C654022
TTEXT CONTROL
IC3502
SAA5243P/E
TTEXT DECODER
IC3506
M5M5165P-12L
OR MN4464-08L
OR MN4464-08LL
OR TC5663APL
64KB SRAM
IC3004
M51326P
BUFFER
RESET
TXT CONT
SWITCH
AUDIO DEFEAT
CONTROL
(1) H-DIN
(2) L-21PIN
(3) X-NOT USE
(1) H-TV OUT
(2) L-MON OUT
(3) X-NOT USE
(IS-TERMINAL)
AV2
AV2 (21P)
GND(PLUG SNIELD)
VIDEO IN (S-Y IN)
VIDEO OUT
GND(HIGH SPEED)
GND(VIDEO)
HIGH SPEED IN
S.C-IN
GND(DATA E)
GND
NC(1 DATA)
NC(2 DATA)
GND
SLOW SW
AUDIO IN (LCH)
GND
GND(AUDIO)
AUDIO OUT (L)
AUDIO IN (RCH)
AUDIO OUT (R)
TV-OUT
MONITOR-OUT
(TO E9)
(TO E10)
(TO E11)
S-VIDEO (NOMAL)
R-OUT
AV CONT1
AV1 VIDEO-IN
AV CONT2
(TV) R-IN
(TV) L-IN
(TV) V-IN
AV1 R-IN
AV1 L-IN
S-CHROMA OUT
VIDEO-OUT
STOP 2
L-OUT
GND
MUTE2
MUTE1
AV2 SLOW SW

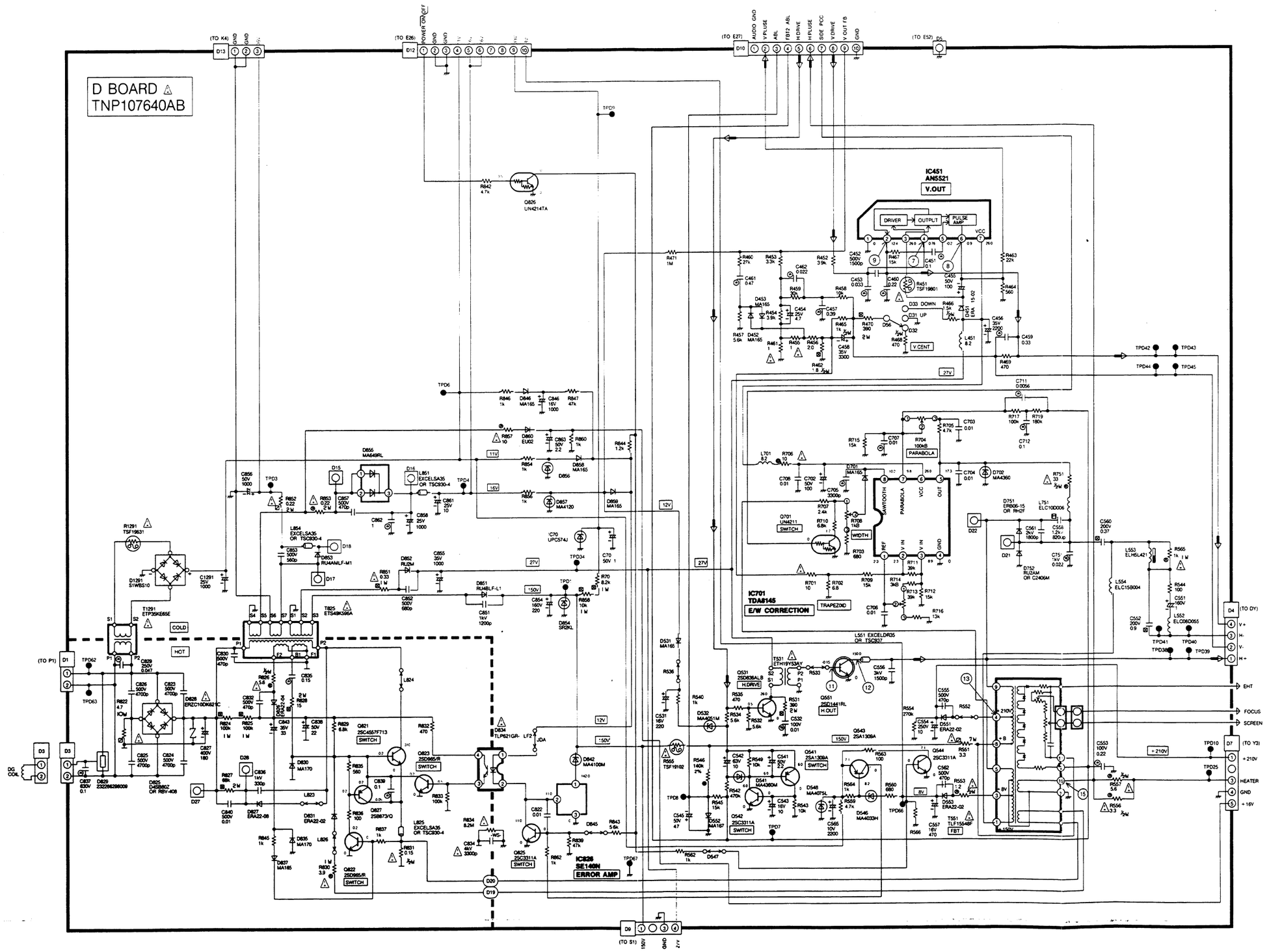
D BOARD
TNP107640AB
IC451
AN5521
V.OUT
IC701
TDA8145
E/W CORRECTION
IC826
SE140N
ERROR AMP
COLD
HOT
DG COIL
EHT
FOCUS
SCREEN
HEATER
GND
+16V
+210V

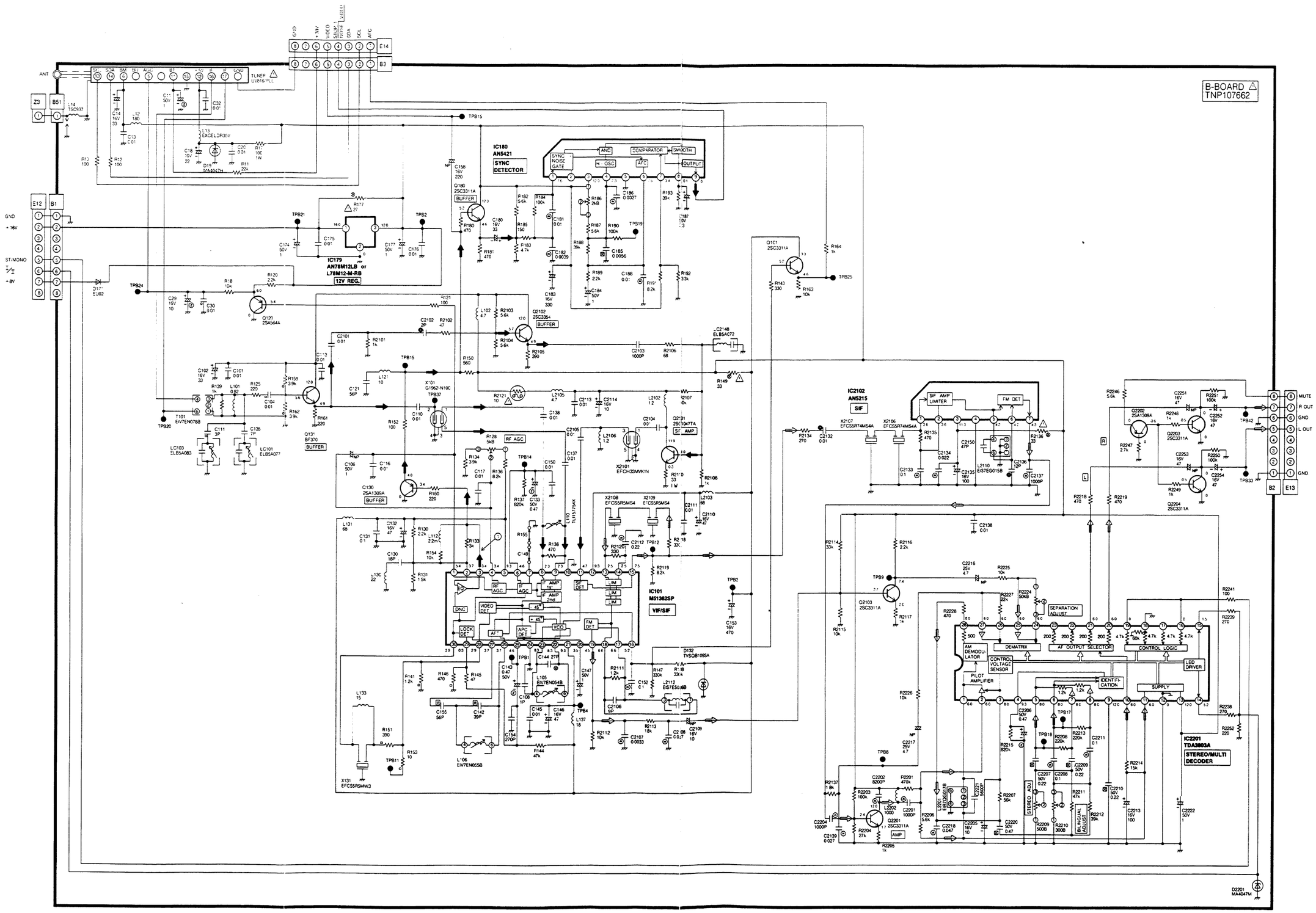
B-BOARD
TNP107662
IC180
AN5421
SYNC DETECTOR
IC179
AN78M12LB or
L78M12-M-RB
12V REG.
IC2102
AN5215
SIF
IC101
M51362SP
VIF/SIF
IC2201
TDA3903A
STEREO/MULTI DECODER
MUTE
R OUT
GND
L OUT
GND
ANT
GND
+16V
ST/MONO
+8V

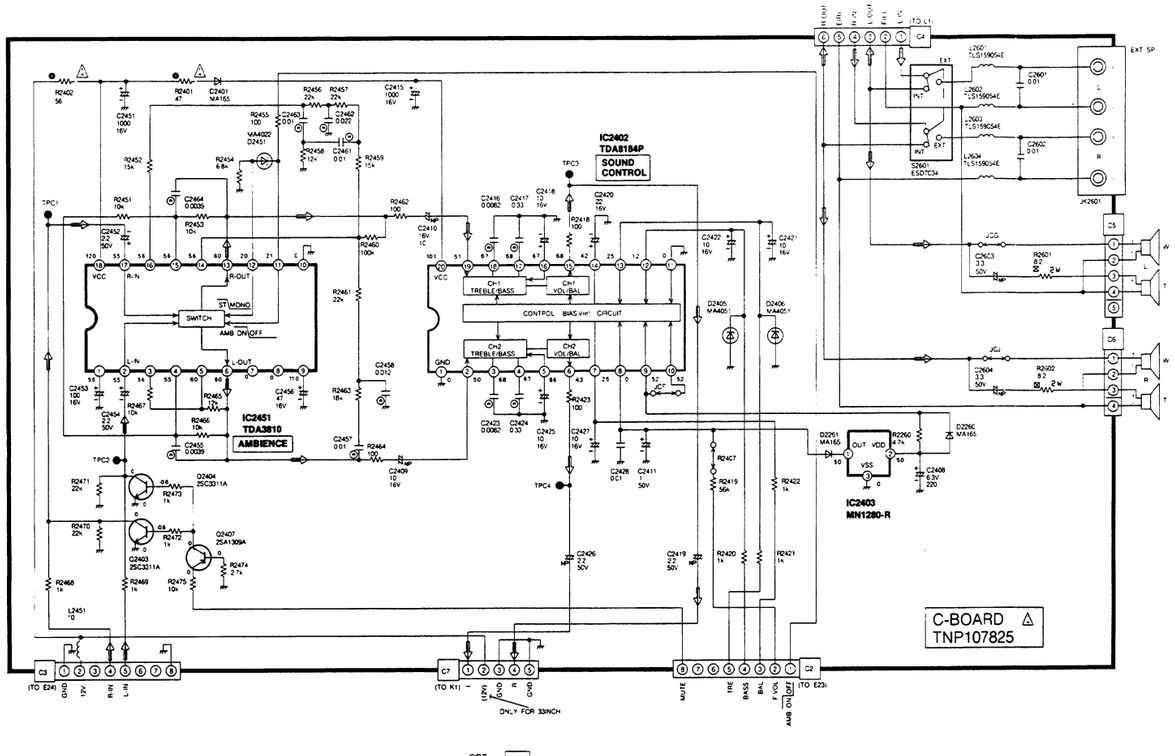
C-BOARD
TNP107825
IC2402
TDA8184P
SOUND CONTROL
IC2451
TDA3810
AMBIENCE
IC2403
MN1280-R
EXT SP
(TO E24)
(TO K1)
(TO E23)
ONLY FOR 33INCH

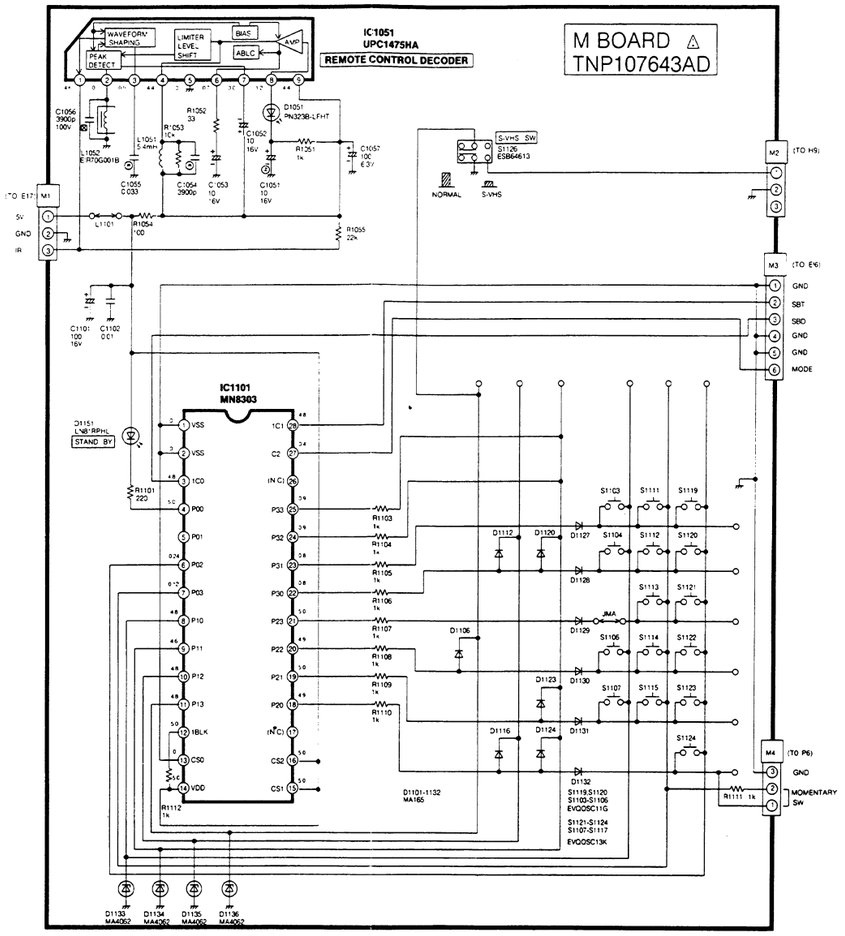
M BOARD
TNP107643AD
IC1051
UPC1475HA
REMOTE CONTROL DECODER
IC1101
MN8303
S-VHS SW
NORMAL
S-VHS
STAND BY
MOMENTARY SW
(TO H5)
(TO E16)
(TO P6)

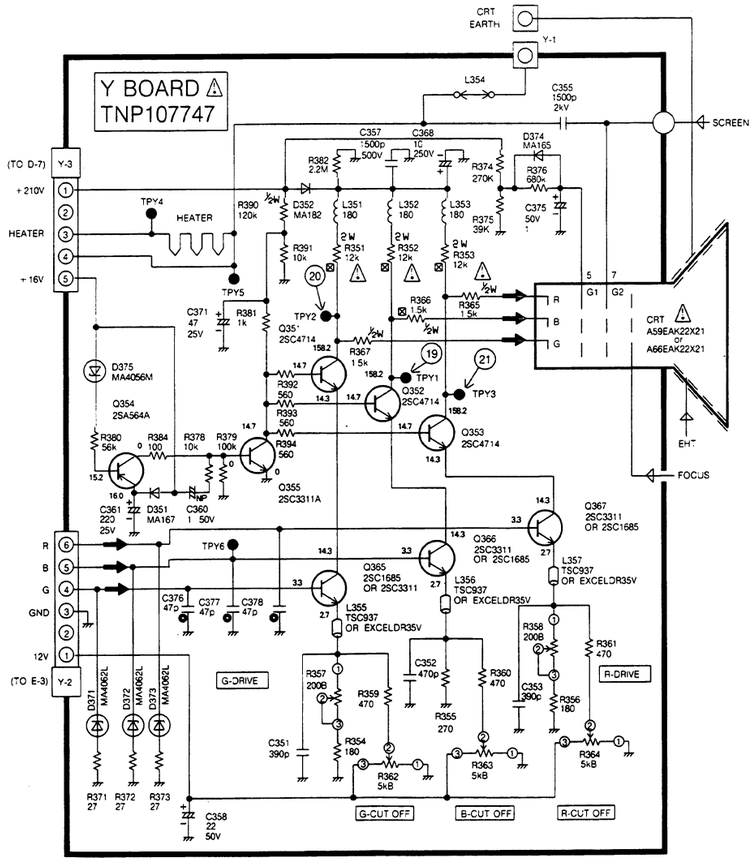
Y BOARD
TNP107747
CRT EARTH
SCREEN
HEATER
CRT
A59EAK22X21
or
A66EAK22X21
FOCUS
EHT
G-DRIVE
R-DRIVE
G-CUT OFF
B-CUT OFF
R-CUT OFF
(TO D-7)
(TO E-3)

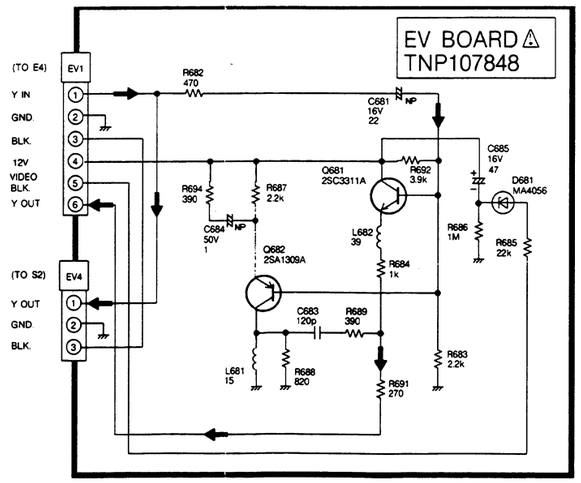
EV BOARD
TNP107848
(TO E4)
(TO S2)

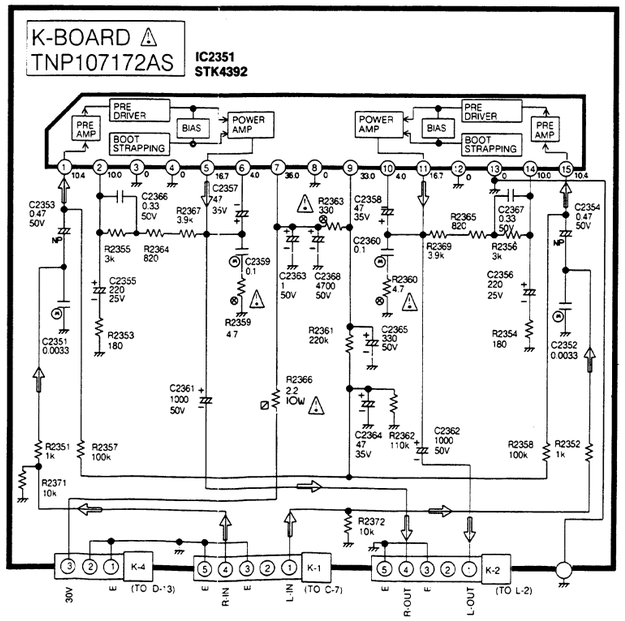
K-BOARD
TNP107172AS
IC2351
STK4392
PRE AMP
PRE DRIVER
BOOT STRAPPING
BIAS
POWER AMP
(TO D-13)
(TO C-7)
(TO L-2)

PARTS LOCATION

EXPLOSIONSZEICHNUNG

Note :
The number on mechanical parts indicates Ref. No of Replacement Parts List.

Anmerkung :
Die Nummer auf den mechanischen Teilen zeigt die Bezugsnummer der Ersatzteilliste an.

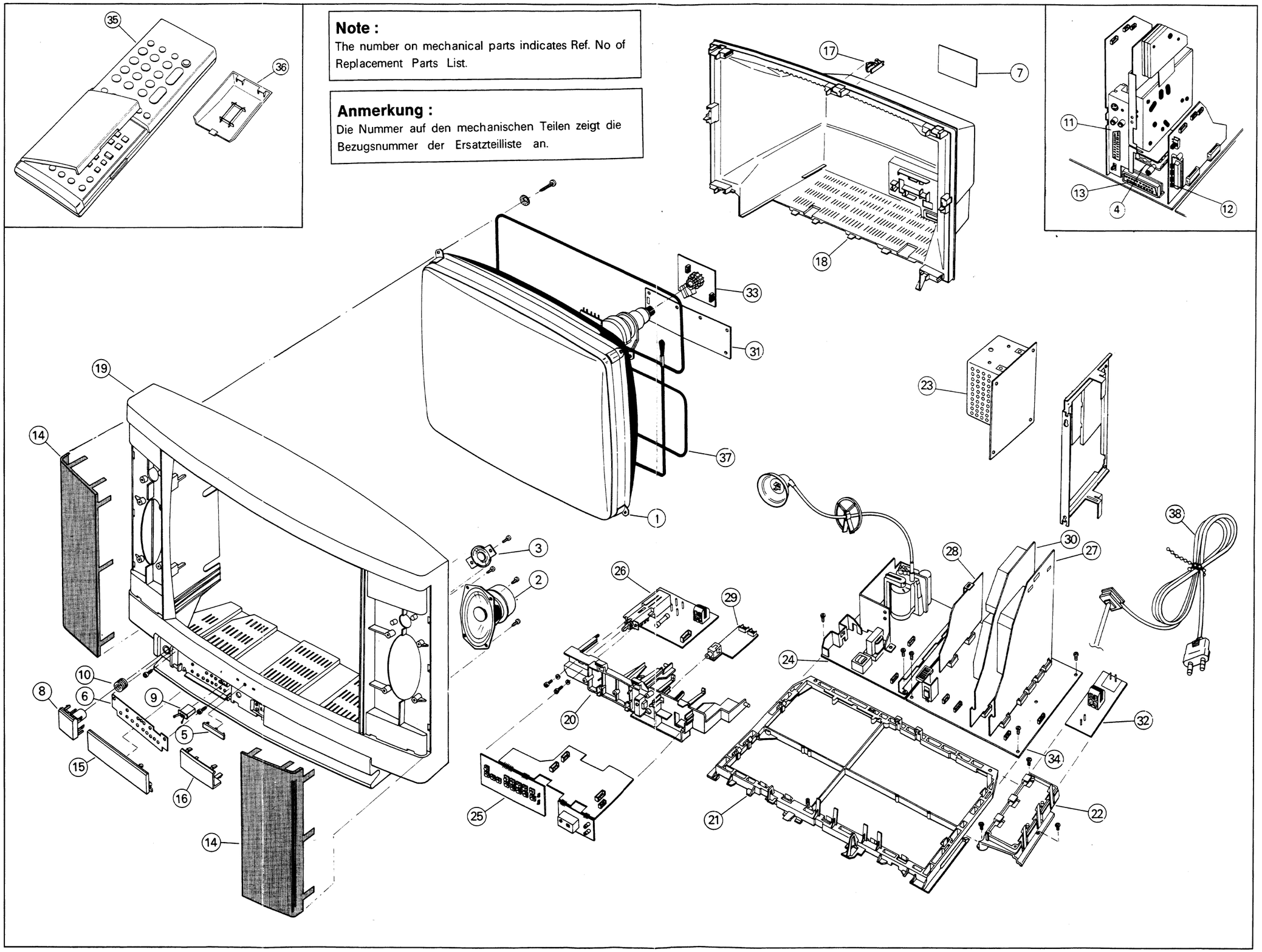

REPLACEMENT PARTS LIST

Important Safety Notice
Components identified by ⚠ mark have special characteristics important for safety. When replacing any of these components, use only manufacturer's specified parts.

ERSATZTEILLISTE

Wichtiger Sicherheitshinweis
Teile, die mit einen Hinweis ⚠ gerkennzeichnet sind, sind wichtig für die Sicherheit. Sollte ein Auswechsein erforderlich sein, sind unbdingt Originalteile einzusetzen.

Ref No.		Part No.	Description
MISCELLANEOUS COMPONENTS			
1)	⚠	A59EAK22X21	C. R. T.
2)		EAS16D135AG	SPEAKER
3)		EAS5PH10R-G	SPEAKER
4)	⚠	UV816/PLL	TUNER
5)		TBM153010	PANASONIC BADGE
6)		TBM170227	PRESET LABEL
7)	⚠	TBM170281	REAR COVER LABEL
8)		TBX2882800	POWER BUTTON
9)		TEK6935	LID SWITCH
10)		TES2266	SPRING (POWERBUTTON)
11)		TJB17675	A. V. 2 / SVHS TERMINAL
12)		TJB18924	EXTERNAL SPEAKER TERMINALS
13)		TJS5A9240	A. V. 1 21 PIN TERMINAL
14)		TKP1757891	SPEAKER NET
15)		TKP1811851	DOOR LID
16)		TKP1811862	SMOKED PANEL
17)		TKR27800	BACK COVER FIXING BLOCK
18)	⚠	TKU586001	REAR COVER
19)	⚠	TKY184900-1	CABINET
20)		TMW27179	CONTROL BRACKET
21)		TMX17121	CHASSIS SUPPORT FRAME
22)		TMX17205	Z BOARD SUPPORT FRAME
23)	⚠	TNP107172AS	K P. C. B.
24)	⚠	TNP107640AB	D P. C. B.
25)	⚠	TNP107643AD	M P. C. B.
26)	⚠	TNP107644AC	P P. C. B.
27)	⚠	TNP107691AC	H P. C. B.
28)	⚠	TNP107825	C P. C. B.
29)	⚠	TNP107699AD	L P. C. B.
30)	⚠	TNP107662	B P. C. B.
31)	⚠	TNP107728	S P. C. B.
32)	⚠	TNP107735AB	Z P. C. B.
33)	⚠	TNP107747	Y P. C. B.
34)	⚠	TNP197064AG	E P. C. B.
35)		TNQ8E0435	REMOTE CONTROL
36)		UR51EC682	BATTERY COVER
37)	⚠	TXFLK01RTG	DEGAUSSING COIL
38)	⚠	TSX5131	POWER LEAD
		TES4537	SPRING
	⚠	TKZ179228	C. R. T. FIXING METAL
		TMW27180	TUNER BRACKET (TOP)
		TMW27181	TUNER BRACKET (BOTTOM)
		TPC1940603	OUTER CARTON
		TPD191537	CUSHION (TOP)
		TPD192539	CUSHION (BOTTOM)
	⚠	TQB8E0527	INSTRUCTION BOOK
DL300		TLK160878E	COIL
DL301		TLK160877E	COIL
DL901		ELB4H036B	COIL
F801	⚠	2133.15	FUSE
	⚠	520-001	FUSE HOLDER
	⚠	TNP107848	EV P.C.B. (PARTS LIST PAGE 48)

DIFFERENCE LIST FOR TX-28W2C

MISCELLANEOUS COMPONENTS

1)	⚠	A66EAK22X21	C. R. T.
2)		EAS16D134KAG	SPEAKER
7)	⚠	TBM170315	REAR COVER LABEL
14)		TKP1757921	SPEAKER NET
18)	⚠	TKU587701	REAR COVER
19)	⚠	TKY187200-1	CABINET
		TPC1941802	OUTER CARTON
		TPD191542	CUSHION (TOP)
		TPD192566	CUSHION (BOTTOM)

Ref No.		Part No.	Description
NOTE : DIFFERENCE LIST SHOWN BELOW IS FOR CI MODELS ONLY			

DIFFERENCE LIST FOR TX-25 / 28W2CI

MISCELLANEOUS COMPONENTS

		TQA8E1084	SCHEMATIC DIAGRAM
		TQB8E9040	ALIGNMENT SPECS.
		TQB8E0587	INSTRUCTION BOOK
		TPC8E4227	OUTER CARTON (TX-25W2CI)
		TPC8E4228	OUTER CARTON (TX-28W2CI)
7)	⚠	TBM8E1108	REAR COVER LABEL (TX-25W2CI)
7)	⚠	TBM8E1109	REAR COVER LABEL (TX-28W2CI)

CAPACITORS

C11	ECEA50Z1	ELECTROLYTIC	50V	1μF
C13	ECUV1H103ZFM	SM CAPACITOR	50V	10nF
C14	ECEA1CU330	ELECTROLYTIC	16V	33μF
C18	ECEA1AU220	ELECTROLYTIC	10V	22μF
C20	ECKC1H103JB	CERAMIC	50V	10nF
C29	ECEA16Z10	ELECTROLYTIC	16V	10μF
C30	ECUV1H103ZFM	SM CAPACITOR	50V	10nF
C32	ECKC1H103JB	CERAMIC	50V	10nF
C70	ECEA1HU010	ELECTROLYTIC	50V	01μF
C101	ECUV1H103ZFM	SM CAPACITOR	50V	10nF
C102	ECEA1CU330	ELECTROLYTIC	16V	33μF
C104	ECUV1H103ZFM	SM CAPACITOR	50V	10nF
C106	ECEA1HN010	ELECTROLYTIC	50V	01μF
C108	ECUV1H010CCM	SM CAPACITOR	50V	01pF
C110	ECUV1H103ZFM	SM CAPACITOR	50V	10nF
C111	ECUV1H030CCM	CAPACITOR		
C113	ECUV1H103ZFM	SM CAPACITOR	50V	10nF
C116	ECUV1H103ZFM	SM CAPACITOR	50V	10nF
C117	ECUV1H103ZFM	SM CAPACITOR	50V	10nF
C121	ECCR1H560J	CERAMIC	50V	56pF
C130	ECCR1H180J	CERAMIC	50V	18pF
C131	ECQV1H104JZ	PLASTIC FILM	50V	100nF
C132	ECEA1CU470	ELECTROLYTIC	16V	47μF
C133	ECEA50ZR47	ELECTROLYTIC	50V	0.47μF
C135	ECUV1H070DM	CAPACITOR		
C137	ECUV1H103ZFM	SM CAPACITOR	50V	10nF
C138	ECUV1H103ZFM	SM CAPACITOR	50V	10nF
C142	ECUV1H390JPM	CAPACITOR		
C143	ECEA50ZR47	ELECTROLYTIC	50V	0.47μF
C144	ECUV1H270JPM	CAPACITOR		
C145	ECUV1H103ZFM	SM CAPACITOR	50V	10nF
C146	ECEA1CU470	ELECTROLYTIC	16V	47μF
C147	ECEA1HU010	ELECTROLYTIC	50V	01μF
C150	ECUV1H103ZFM	SM CAPACITOR	50V	10nF
C152	ECQV1H104JZ	PLASTIC FILM	50V	100nF
C153	ECEA1CU471	ELECTROLYTIC	16V	470μF
C154	ECKC1H271J	CERAMIC	50V	270pF
C155	ECUV1H560JM	SM CAPACITOR	50V	56pF
C158	ECEA1CN221	ELECTROLYTIC	16V	220μF
C174	ECEA1HU010	ELECTROLYTIC	50V	01μF
C175	ECKC1H103JB	CERAMIC	50V	10nF
C176	ECKC1H103JB	CERAMIC	50V	10nF
C177	ECEA1HU010	ELECTROLYTIC	50V	01μF
C180	ECEA1CU330	ELECTROLYTIC	16V	33μF
C181	ECQB1H103K	PLASTIC FILM	50V	10nF
C182	ECQB1H392K	PLASTIC FILM	50V	3.9nF
C183	ECEA1CU331	ELECTROLYTIC	16V	330μF
C184	ECEA1HU010	ELECTROLYTIC	50V	01μF
C185	ECQP1562JZ	PLASTIC FILM	100V	5.6nF
C186	ECQB1H272K	PLASTIC FILM	50V	2.7nF
C187	ECEA1HU3R3	ELECTROLYTIC	50V	3.3μF
C188	ECQB1H103K	PLASTIC FILM	50V	10nF

Ref No.	Part No.	Description		
C308	ECQV1H104JZ	PLASTIC FILM	50V	100nF
C309	ECEA1HU100	ELECTROLYTIC	50V	10μF
C311	ECEA1HUR47	ELECTROLYTIC	50V	0.47μF
C312	ECQV1H334JZ	PLASTIC FILM	50V	330nF
C313	ECQV1H334JZ	PLASTIC FILM	50V	330nF
C314	ECQV1H334JZ	PLASTIC FILM	50V	330nF
C316	ECEA1CN470	ELECTROLYTIC	16V	47μF
C322	ECCR1H820J	CERAMIC	50V	82pF
C324	ECEA1CU100	ELECTROLYTIC	16V	10μF
C325	ECEA0JU221	ELECTROLYTIC	6.3V	220μF
C326	ECEA1HN010	ELECTROLYTIC	50V	01μF
C327	ECCR1H820J	CERAMIC	50V	82pF
C328	ECEA1CU470	ELECTROLYTIC	16V	47μF
C329	ECEA1CU100	ELECTROLYTIC	16V	10μF
C330	ECEA1EU4R7	ELECTROLYTIC	25V	4.7μF
C331	ECEA1HN010	ELECTROLYTIC	50V	01μF
C332	ECEA1CN220	ELECTROLYTIC	16V	22μF
C334	ECEA1CU100	ELECTROLYTIC	16V	10μF
C335	ECEA1CU101	ELECTROLYTIC	16V	100μF
C336	ECQV1H104JZ	PLASTIC FILM	50V	100nF
C337	ECKC1H103JB	CERAMIC	50V	10nF
C338	ECKC1H103JB	CERAMIC	50V	10nF
C339	ECQV1H104JZ	PLASTIC FILM	50V	100nF
C340	ECQV1H104JZ	PLASTIC FILM	50V	100nF
C341	ECQV1H104JZ	PLASTIC FILM	50V	100nF
C346	ECEA1CN470	ELECTROLYTIC	16V	47μF
C351	ECCR1H271J	CERAMIC	50V	270pF
C351	ECCR1H391J	CERAMIC	50V	390pF
C352	ECCR1H331J	CERAMIC	50V	330pF
C352	ECCR1H471J	CERAMIC	50V	470pF
C353	ECCR1H271J	CERAMIC	50V	270pF
C353	ECCR1H391J	CERAMIC	50V	390pF
C355 ⚠	ECKC3D152J	CERAMIC	2KV	1.5nF
C357 ⚠	ECKC2H152J	CERAMIC	500V	1.5nF
C358	ECEA1HU220	ELECTROLYTIC	50V	22μF
C360	ECEA1HN010	ELECTROLYTIC	50V	01μF
C361	ECEA1EU221	ELECTROLYTIC	25V	220μF
C368	ECEA2EU100	ELECTROLYTIC	250V	10μF
C371	ECEA1EGE470	ELECTROLYTIC	50V	47μF
C375	ECEA1HU010	ELECTROLYTIC	50V	01μF
C375	ECEA1HU100	ELECTROLYTIC	50V	10μF
C376	ECCR1H470J	CERAMIC	50V	47pF
C377	ECCR1H470J	CERAMIC	50V	47pF
C378	ECCR1H470J	CERAMIC	50V	47pF
C400	ECKC1H103JB	CERAMIC	50V	10nF
C401	ECQV1H334JZ	PLASTIC FILM	50V	330nF
C402	ECQV1H334JZ	PLASTIC FILM	50V	330nF
C451	ECQB1H683K	PLASTIC FILM	50V	68nF
C452 ⚠	ECKC2H152J	CERAMIC	500V	1.5nF
C453	ECQB1H333K	PLASTIC FILM	50V	33nF
C454	ECEA1EF4R7	ELECTROLYTIC	25V	4.7μF
C455	ECEA1HU101	ELECTROLYTIC	50V	100μF
C456	ECEA1VU222	ELECTROLYTIC	35V	2200μF
C457	ECQV1H394JZ	PLASTIC FILM	50V	390nF
C458	ECEA1VGE332	ELECTROLYTIC	35V	3300μF
C459	ECQV1H334JZ	PLASTIC FILM	50V	330nF
C460	ECQV1H224JZ	PLASTIC FILM	50V	220nF
C461	ECQV1H474JZ	PLASTIC FILM	50V	470nF
C462	ECQB1H223K	PLASTIC FILM	50V	22nF
C501	ECQV1H104JZ	PLASTIC FILM	50V	100nF
C502	ECQP1152GZ	PLASTIC FILM	100V	1.5nF
C503	ECQV1H104JZ	PLASTIC FILM	50V	100nF
C504	ECEA1CU102	ELECTROLYTIC	16V	1000μF
C505	ECKC1H101J	CERAMIC	50V	100pF
C506	ECEA1HU220	ELECTROLYTIC	50V	22uF
C507	ECEA1HU4R7	ELECTROLYTIC	50V	4.7μF
C510	ECQB1H682K	PLASTIC FILM	50V	6.8nF
C515	ECQB1H122J	PLASTIC FILM	50V	1.2nF
C517	ECQV1H104JZ	PLASTIC FILM	50V	100nF
C518	ECEA1CU100	ELECTROLYTIC	16V	10μF
C519	ECEA1CU330	ELECTROLYTIC	16V	33μF
C520	ECEA1VU4R7	ELECTROLYTIC	35V	4.7μF
C522	ECEA1CN100	ELECTROLYTIC	16V	10μF
C524	ECKC1H102J	CERAMIC	50V	1.0nF
C531	ECEA1CU221	ELECTROLYTIC	16V	220μF
C532	ECQM1103KZ	PLASTIC FILM	100V	10nF
C541	ECEA1HU2R2	ELECTROLYTIC	50V	2.2μF
C542	ECEA1JU100	ELECTROLYTIC	63V	10μF
C543	ECEA1CU100	ELECTROLYTIC	16V	10μF
C545	ECEA1HU4R7	ELECTROLYTIC	50V	4.7μF
C551	ECEA2CG010	ELECTROLYTIC	160V	01μF
C552	ECWF2H904J	PLASTIC FILM	500V	900nF

Ref No.	Part No.	Description		
C553	ECQE1224K	PLASTIC FILM	100V	220nF
C554	ECEA2EU100	ELECTROLYTIC	250V	10μF
C555 ⚠	ECKC2H471J	CERAMIC	500V	470pF
C556 ⚠	ECKC3F152J	CERAMIC	3KV	1.5nF
C557	ECEA1CU471	ELECTROLYTIC	16V	470μF
C558	ECWH12H822J	CERAMIC	500V	8.2nF
C560	ECWF2H374J	PLASTIC FILM	500V	370nF
C561 ⚠	ECKC3D182JB	CERAMIC	2KV	1.8nF
C562 ⚠	ECKC2H471J	CERAMIC	500V	470pF
C565	ECEA1AU222	ELECTROLYTIC	10V	2200μF
C600	ECEA1CU222	ELECTROLYTIC	16V	2200μF
C601	ECEA1CN100	ELECTROLYTIC	16V	10μF
C602	ECQB1H223K	PLASTIC FILM	50V	22nF
C603	ECQB1H223K	PLASTIC FILM	50V	22nF
C604	ECQB1H223K	PLASTIC FILM	50V	22nF
C605	ECEA1CN100	ELECTROLYTIC	16V	10μF
C606	ECCR1H100J	CERAMIC	50V	10pF
C607	ECEA1HU010	ELECTROLYTIC	50V	01μF
C608	ECCR1H150J	CERAMIC	50V	15pF
C609	ECKC1H151J	CERAMIC	50V	150pF
C610	ECQV1H104JZ	PLASTIC FILM	50V	100nF
C611	ECQV1H104JZ	PLASTIC FILM	50V	100nF
C612	ECCR1H150J	CERAMIC	50V	15pF
C613	ECKC1H103JB	CERAMIC	50V	10nF
C614	ECCR1H100J	CERAMIC	50V	10pF
C615	ECQV1H334JZ	PLASTIC FILM	50V	330nF
C616	ECCR1H121J	CERAMIC	50V	120pF
C617	ECKC1H151J	CERAMIC	50V	150pF
C618	ECQB1H223K	PLASTIC FILM	50V	22nF
C619	ECQB1H223K	PLASTIC FILM	50V	22nF
C620	ECKC1H102J	CERAMIC	50V	1.0nF
C621	ECQB1H473K	PLASTIC FILM	50V	47nF
C622	ECQV1H334JZ	PLASTIC FILM	50V	330nF
C623	ECQV1H334JZ	PLASTIC FILM	50V	330nF
C624	ECQV1H334JZ	PLASTIC FILM	50V	330nF
C625	ECQB1H223K	PLASTIC FILM	50V	22nF
C626	ECKC1H103JB	CERAMIC	50V	10nF
C627	ECEA1CU221	ELECTROLYTIC	16V	220μF
C628	ECQB1H223K	PLASTIC FILM	50V	22nF
C629	ECQB1H223K	PLASTIC FILM	50V	22nF
C630	ECKC1H221J	CERAMIC	50V	220pF
C631	ECKC1H221J	CERAMIC	50V	220pF
C632	ECQV1H104JZ	PLASTIC FILM	50V	100nF
C633	ECQB1H223K	PLASTIC FILM	50V	22nF
C634	ECQB1H473K	PLASTIC FILM	50V	47nF
C635	ECRLA030E53R	TRIMMER CAPACITOR		30pF
C636	ECQV1H104JZ	PLASTIC FILM	50V	100nF
C637	ECRLA030E53R	TRIMMER CAPACITOR		30pF
C638	ECQV1H334JZ	PLASTIC FILM	50V	330nF
C639	ECKC1H103JB	CERAMIC	50V	10nF
C640	ECQV1H104JZ	PLASTIC FILM	50V	100nF
C641	ECCR1H151J	CERAMIC	50V	150pF
C642	ECKC1H103JB	CERAMIC	50V	10nF
C643	ECQV1H104JZ	PLASTIC FILM	50V	100nF
C644	ECKC1H103JB	CERAMIC	50V	10nF
C645	ECKC1H103JB	CERAMIC	50V	10nF
C646	ECKC1H103JB	CERAMIC	50V	10nF
C647	ECKC1H103JB	CERAMIC	50V	10nF
C648	ECCR1H391J	CERAMIC	50V	390pF
C649	ECCR1H151J	CERAMIC	50V	150pF
C650	ECCR1H101J	CERAMIC	50V	100pF
C651	ECKC1H103JB	CERAMIC	50V	10nF
C652	ECEA1CU100	ELECTROLYTIC	16V	10μF
C653	ECKC1H103JB	CERAMIC	50V	10nF
C654	ECEA1CU100	ELECTROLYTIC	16V	10μF
C655	ECCR1H470J	CERAMIC	50V	47pF
C659	ECEA1CU101	ELECTROLYTIC	16V	100μF
C662	ECKC1H103JB	CERAMIC	50V	10nF
C663	ECKC1H103JB	CERAMIC	50V	10nF
C664	ECKC1H103JB	CERAMIC	50V	10nF
C665	EXFP4103ZW	RESISTOR		
C681	ECEA1HN010	ELECTROLYTIC	50V	01μF
C682	ECCR1H220J	CERAMIC	50V	22pF
C683	ECKC1H221J	CERAMIC	50V	220pF
C684	ECEA1CN220	ELECTROLYTIC	16V	22μF
C685	ECEA1EN3R3	ELECTROLYTIC	25V	3.3μF
C702	ECEA1HGE101	ELECTROLYTIC	50V	100μF
C703	ECKC1H103JB	CERAMIC	50V	10nF
C704	ECKC1H103JB	CERAMIC	50V	10nF
C705	ECQB1H332K	PLASTIC FILM	50V	3.3nF
C706	ECKC1H103JB	CERAMIC	50V	10nF
C707	ECKC1H103JB	CERAMIC	50V	10nF

Ref No.	Part No.	Description		
C708	ECKC1H103JB	CERAMIC	50V	10nF
C711	ECQB1H562K	PLASTIC FILM	50V	5.6nF
C712	ECQV1H104JZ	PLASTIC FILM	50V	100nF
C751 ⚠	ECQM10223JZ	PLASTIC FILM	1KV	22nF
C801	ECQM2A334MW	PLASTIC FILM	250V	330nF
C802 ⚠	ECQU2A473MN	PLASTIC FILM	250V	47nF
C814	ECKCNS471MB	CERAMIC	1.2KV	470pF
C822	ECKC1H103JB	CERAMIC	50V	10nF
C823 ⚠	ECKC2H472J	CERAMIC	500V	4.7nF
C824 ⚠	ECKC2H472J	CERAMIC	500V	4.7nF
C825 ⚠	ECKC2H472J	CERAMIC	500V	4.7nF
C826 ⚠	ECKC2H472J	CERAMIC	500V	4.7nF
C827	ECOS2GG181N	CAPACITOR		
C829	ECQM6473KZ	PLASTIC FILM	600V	47nF
C830 ⚠	ECKC2H471J	CERAMIC	500V	470pF
C832 ⚠	ECKC2H471J	CERAMIC	500V	470pF
C834 ⚠	ECKCNS332J	CERAMIC	1.2KV	3.3nF
C835	ECQV1H154JZ	PLASTIC FILM	50V	150nF
C836 ⚠	ECKC3D331J	CERAMIC	2KV	330pF
C837	ECQE6104K	PLASTIC FILM	600V	100nF
C838	ECEA1HGE220	ELECTROLYTIC	50V	220μF
C839	ECQV1H104JZ	PLASTIC FILM	50V	100nF
C840 ⚠	ECKC2H103J	CERAMIC	500V	10nF
C843	ECEA1VGE330	ELECTROLYTIC	35V	330μF
C846	ECEA1EU102	ELECTROLYTIC	25V	1000μF
C851 ⚠	ECKC3A122J	CERAMIC	1KV	1.2nF
C852 ⚠	ECKC2H681J	CERAMIC	500V	680pF
C853 ⚠	ECKC2H561J	CERAMIC	500V	560pF
C854	ECEA2CV221	ELECTROLYTIC	160V	220μF
C855	ECEA1VGE102	ELECTROLYTIC	35V	10E1μF
C856	ECEA1HU102	ELECTROLYTIC	50V	1000μF
C857 ⚠	ECKC2H471J	CERAMIC	500V	470pF
C858	ECEA1EU102	ELECTROLYTIC	25V	1000μF
C861	ECEA1EU100	ELECTROLYTIC	25V	10μF
C862	ECQV1H105JZ	PLASTIC FILM	50V	1.0μF
C863	ECEA1HU2R2	ELECTROLYTIC	50V	2.2μF
C891	ECEA1EU471	ELECTROLYTIC	25V	470μF
C892	ECQB1H333K	PLASTIC FILM	50V	33nF
C901	ECQV1H104JZ	PLASTIC FILM	50V	100nF
C902	ECKC1H271J	CERAMIC	50V	270pF
C903	ECEA1CU220	ELECTROLYTIC	16V	22μF
C904	ECKC1H103JB	CERAMIC	50V	10nF
C905	ECCR1H121J	CERAMIC	50V	120pF
C910	ECEA1CU100	ELECTROLYTIC	16V	10μF
C911	ECEA1CU470	ELECTROLYTIC	16V	47μF
C922	ECCR1H820J	CERAMIC	50V	82pF
C923	ECCR1H820J	CERAMIC	50V	82pF
C952	ECEA1VU101	ELECTROLYTIC	35V	100μF
C953	ECKC1H471J	CERAMIC	50V	470pF
C954	ECQB1H823K	PLASTIC FILM	50V	82nF
C955	ECCR1H220J	CERAMIC	50V	22pF
C957	ECKC1H103JB	CERAMIC	50V	10nF
C958	ECEA2CU100	ELECTROLYTIC	160V	10μF
C959 ⚠	ECKC2H472J	CERAMIC	500V	4.7nF
C960 ⚠	ECKC2H151J	CERAMIC	500V	150pF
C961	ECEA2CU100	ELECTROLYTIC	160V	10μF
C962 ⚠	ECKC2H472J	CERAMIC	500V	4.7nF
C963 ⚠	ECKC2H151J	CERAMIC	500V	150pF
C964	ECEA0JU101	ELECTROLYTIC	6.3V	100μF
C966	ECEA0JU101	ELECTROLYTIC	6.3V	100μF
C967	ECEA1AU331	ELECTROLYTIC	10V	330μF
C968	ECKC1H103JB	CERAMIC	50V	10nF
C969	ECEA1CU470	ELECTROLYTIC	16V	47μF
C971	ECKC1H103JB	CERAMIC	50V	10nF
C1051	ECEA16Z10	ELECTROLYTIC	16V	10μF
C1052	ECEA1CU100	ELECTROLYTIC	16V	10μF
C1053	ECEA1CU100	ELECTROLYTIC	16V	10μF
C1054	ECQB1H392K	PLASTIC FILM	50V	3.9nF
C1055	ECQB1H333J	PLASTIC FILM	50V	33nF
C1056	ECQP1392JZ	PLASTIC FILM	100V	3.9nF
C1057	ECEA0JU101	ELECTROLYTIC	6.3V	100μF
C1101	ECEA0JU101	ELECTROLYTIC	6.3V	100μF
C1102	ECKC1H103JB	CERAMIC	50V	10nF
C1205	ECQV1H104JZ	PLASTIC FILM	50V	100nF
C1207	ECCR1H121J	CERAMIC	50V	120pF
C1208	ECEA1EU101	ELECTROLYTIC	25V	100μF
C1214	ECEA0JU221	ELECTROLYTIC	6.3V	220μF
C1217	ECCR1H181J	CERAMIC	50V	180pF
C1218	ECKC1H271J	CERAMIC	50V	270pF
C1219	ECCR1H680J	CERAMIC	50V	68pF
C1221	ECKC1H103JB	CERAMIC	50V	10nF
C1222	ECEA0JU471	ELECTROLYTIC	6.3V	470μF

Ref No.	Part No.	Description		
C1225	ECKC1H471J	CERAMIC	50V	470pF
C1227	ECQV1H104JZ	PLASTIC FILM	50V	100nF
C1236	ECEA1HU2R2	ELECTROLYTIC	50V	2.2μF
C1237	ECKC1H472J	CERAMIC	50V	4.7nF
C1239	ECCR1H560J	CERAMIC	50V	56pF
C1246	ECKC1H821J	CERAMIC	50V	820pF
C1247	ECKC1H181J	CERAMIC	50V	180pF
C1249	ECQV1H104JZ	PLASTIC FILM	50V	100nF
C1250	EXFP6471ZF	NETWORK COMPONENT		
C1251	ECKC1H103JB	CERAMIC	50V	10nF
C1252	ECEA1CU100	ELECTROLYTIC	16V	10μF
C1253	ECCR1H101J	CERAMIC	50V	100pF
C1256	ECEA0JU471	ELECTROLYTIC	6.3V	470μF
C1257	ECKC1H101J	CERAMIC	50V	100pF
C1258	ECCR1H220J	CERAMIC	50V	22pF
C1262	EXFP6471ZF	NETWORK COMPONENT		
C1263	ECKC1H103JB	CERAMIC	50V	10nF
C1266	ECKC1H471J	CERAMIC	50V	470pF
C1268	ECCR1H121J	CERAMIC	50V	120pF
C1269	ECCR1H121J	CERAMIC	50V	120pF
C1270	ECCR1H220J	CERAMIC	50V	22pF
C1287	ECKC1H271J	CERAMIC	50V	270pF
C1291	ECEA1EU102	ELECTROLYTIC	25V	1000μF
C2101	ECUV1H103ZFM	SM CAPACITOR	50V	10nF
C2102	ECKC1H102J	CERAMIC	50V	1.0nF
C2103	ECKC1H102J	CERAMIC	50V	1.0nF
C2104	ECUV1H103ZFM	SM CAPACITOR	50V	10nF
C2105	ECUV1H103ZFM	SM CAPACITOR	50V	10nF
C2106	ECCR1H090C	CERAMIC	50V	09pF
C2107	ECQB1H332K	PLASTIC FILM	50V	3.3nF
C2108	ECQB1H273K	PLASTIC FILM	50V	27nF
C2109	ECEA1CN100	ELECTROLYTIC	16V	10μF
C2110	ECEA1CU470	ELECTROLYTIC	16V	47μF
C2111	ECUV1H103ZFM	SM CAPACITOR	50V	10nF
C2112	ECQV1H224JZ	PLASTIC FILM	50V	220nF
C2113	ECUV1H103ZFM	SM CAPACITOR	50V	10nF
C2114	ECEA1CU100	ELECTROLYTIC	16V	10μF
C2132	ECKC1H103JB	CERAMIC	50V	10nF
C2133	ECQB1H104K	PLASTIC FILM	50V	100nF
C2134	ECQB1H223K	PLASTIC FILM	50V	22nF
C2135	ECEA1CU101	ELECTROLYTIC	16V	100μF
C2136	ECCR1H120J	CERAMIC	50V	12pF
C2137	ECQB1H102K	PLASTIC FILM	50V	1.0nF
C2138	ECKC1H103JB	CERAMIC	50V	10nF
C2139	ECQB1H273K	PLASTIC FILM	50V	27nF
C2150	ECUV1H470JRM	SM CAPACITOR	50V	47nF
C2201	ECQB1H102K	PLASTIC FILM	50V	1.0nF
C2202	ECQB1H822K	PLASTIC FILM	50V	8.2nF
C2204	ECQB1H102K	PLASTIC FILM	50V	1.0nF
C2205	ECEA1CU100	ELECTROLYTIC	16V	10μF
C2206	ECEA50ZR47	ELECTROLYTIC	50V	0.47μF
C2207	ECQV1H224JZ	PLASTIC FILM	50V	220nF
C2208	ECQV1H104JZ	PLASTIC FILM	50V	100nF
C2209	ECQV1H224JZ	PLASTIC FILM	50V	220nF
C2210	ECQV1H224JZ	PLASTIC FILM	50V	220nF
C2211	ECQV1H104JZ	PLASTIC FILM	50V	100nF
C2213	ECEA1CU101	ELECTROLYTIC	16V	100μF
C2216	ECEA1EN4R7	ELECTROLYTIC	25V	4.7μF
C2217	ECEA1EN4R7	ELECTROLYTIC	25V	4.7μF
C2218	ECQB1H473K	PLASTIC FILM	50V	47nF
C2220	ECQV1H474JZ	PLASTIC FILM	50V	470nF
C2221	ECQP1562JZ	PLASTIC FILM	100V	5.6nF
C2222	ECEA1HU010	ELECTROLYTIC	50V	01μF
C2251	ECEA1CN470	ELECTROLYTIC	16V	47μF
C2252	ECEA1CU470	ELECTROLYTIC	16V	47μF
C2253	ECEA1CN470	ELECTROLYTIC	16V	47μF
C2254	ECEA1CU470	ELECTROLYTIC	16V	47μF
C2351	ECQB1H332K	PLASTIC FILM	50V	3.3nF
C2352	ECQB1H332K	PLASTIC FILM	50V	3.3nF
C2353	ECEA1HGNR47	ELECTROLYTIC	50V	0.47μF
C2354	ECEA1HGNR47	ELECTROLYTIC	50V	0.47μF
C2355	ECEA1EGE221	ELECTROLYTIC	25V	220μF
C2356	ECEA1EGE221	ELECTROLYTIC	25V	220μF
C2357	ECEA1VGE470	ELECTROLYTIC	35V	47μF
C2358	ECEA1VGE470	ELECTROLYTIC	35V	47μF
C2359	ECQV1H104JZ	PLASTIC FILM	50V	100nF
C2360	ECQV1H104JZ	PLASTIC FILM	50V	100nF
C2361	ECEA1HGE102	ELECTROLYTIC	50V	1000μF
C2362	ECEA1HGE102	ELECTROLYTIC	50V	1000μF
C2363	ECEA1HGE010	ELECTROLYTIC	50V	01μF
C2364	ECEA1VGE470	ELECTROLYTIC	35V	47μF
C2365	ECEA1HGE331	ELECTROLYTIC	50V	330μF

Ref No.	Part No.	Description		
C2366	ECQV1H334JZ	PLASTIC FILM	50V	330nF
C2367	ECQV1H334JZ	PLASTIC FILM	50V	330nF
C2368	ECEA1HU472	ELECTROLYTIC	50V	4700μF
C2408	ECEA1CS221	ELECTROLYTIC	16V	220μF
C2409	ECEA1CN100	ELECTROLYTIC	16V	10μF
C2410	ECEA1CN100	ELECTROLYTIC	16V	10μF
C2411	ECEA1HU010	ELECTROLYTIC	50V	01μF
C2415	ECEA1CU102	ELECTROLYTIC	16V	1000μF
C2416	ECQB1H822K	PLASTIC FILM	50V	8.2nF
C2417	ECQV1H334JZ	PLASTIC FILM	50V	330nF
C2418	ECEA1CU100	ELECTROLYTIC	16V	10μF
C2419	ECEA1HN2R2	ELECTROLYTIC	50V	2.2μF
C2420	ECEA1CU220	ELECTROLYTIC	16V	22μF
C2421	ECEA1CU100	ELECTROLYTIC	16V	10μF
C2422	ECEA1CU100	ELECTROLYTIC	16V	10μF
C2423	ECQB1H822K	PLASTIC FILM	50V	8.2nF
C2424	ECQV1H334JZ	PLASTIC FILM	50V	330nF
C2425	ECEA1CU100	ELECTROLYTIC	16V	10μF
C2426	ECEA1HN2R2	ELECTROLYTIC	50V	2.2μF
C2427	ECEA1CU100	ELECTROLYTIC	16V	10μF
C2428	ECKC1H103JB	CERAMIC	50V	10nF
C2451	ECEA1CU102	ELECTROLYTIC	16V	1000μF
C2452	ECEA1HU2R2	ELECTROLYTIC	50V	2.2μF
C2453	ECEA1CU101	ELECTROLYTIC	16V	100μF
C2454	ECEA1HU2R2	ELECTROLYTIC	50V	2.2μF
C2455	ECQB1H392K	PLASTIC FILM	50V	3.9nF
C2456	ECEA1CU470	ELECTROLYTIC	16V	47μF
C2457	ECQB1H103K	PLASTIC FILM	50V	10nF
C2458	ECQB1H123K	PLASTIC FILM	50V	12nF
C2461	ECQB1H103K	PLASTIC FILM	50V	10nF
C2462	ECQB1H223K	PLASTIC FILM	50V	22nF
C2463	ECQB1H103K	PLASTIC FILM	50V	10nF
C2464	ECQB1H392K	PLASTIC FILM	50V	3.9nF
C2601	ECKC1H103JB	CERAMIC	50V	10nF
C2602	ECKC1H103JB	CERAMIC	50V	10nF
C2603	ECEA50Y3R3	ELECTROLYTIC	50V	3.3μF
C2604	ECEA50Y3R3	ELECTROLYTIC	50V	3.3μF
C2651	ECKC1H103JB	CERAMIC	50V	10nF
C2652	ECKC1H103JB	CERAMIC	50V	10nF
C3001	ECEA1CU471	ELECTROLYTIC	16V	470μF
C3002	ECEA1CN330	ELECTROLYTIC	16V	33μF
C3003	ECEA1CN100	ELECTROLYTIC	16V	10μF
C3004	ECKC1H103JB	CERAMIC	50V	10nF
C3005	ECEA1CU100	ELECTROLYTIC	16V	10μF
C3006	ECEA1CN100	ELECTROLYTIC	16V	10μF
C3007	ECCR1H101J	CERAMIC	50V	100pF
C3008	ECEA1CU221	ELECTROLYTIC	16V	220μF
C3009	ECEA1CN100	ELECTROLYTIC	16V	10μF
C3012	ECEA1CN100	ELECTROLYTIC	16V	10μF
C3014	ECCR1H101J	CERAMIC	50V	100pF
C3015	ECEA1CN100	ELECTROLYTIC	16V	10μF
C3018	ECEA1CN100	ELECTROLYTIC	16V	10μF
C3020	ECEA1CU471	ELECTROLYTIC	16V	470μF
C3021	ECKC1H103JB	CERAMIC	50V	10nF
C3022	ECEA1CN100	ELECTROLYTIC	16V	10μF
C3023	ECEA1EN4R7	ELECTROLYTIC	25V	4.7μF
C3024	ECEA1EN4R7	ELECTROLYTIC	25V	4.7μF
C3025	ECKC1H561J	CERAMIC	50V	560pF
C3026	ECKC1H561J	CERAMIC	50V	560pF
C3027	ECKC1H222J	CERAMIC	50V	2.2nF
C3028	ECKC1H222J	CERAMIC	50V	2.2nF
C3029	ECKC1H103JB	CERAMIC	50V	10nF
C3030	ECEA1CU101	ELECTROLYTIC	16V	100μF
C3031	ECEA1CU100	ELECTROLYTIC	16V	10μF
C3032	ECEA1CU100	ELECTROLYTIC	16V	10μF
C3033	ECEA1CU100	ELECTROLYTIC	16V	10μF
C3034	ECEA1CU100	ELECTROLYTIC	16V	10μF
C3035	ECKC1H121J	CERAMIC	50V	120pF
C3036	ECEA1CN101	ELECTROLYTIC	16V	100μF
C3037	ECQV1H104JZ	PLASTIC FILM	50V	100nF
C3039	ECEA1CU471	ELECTROLYTIC	16V	470μF
C3040	ECKC1H222J	CERAMIC	50V	2.2nF
C3041	ECKC1H222J	CERAMIC	50V	2.2nF
C3042	ECEA1CN100	ELECTROLYTIC	16V	10μF
C3043	ECEA1CN100	ELECTROLYTIC	16V	10μF
C3044	ECQV1H104JZ	PLASTIC FILM	50V	100nF
C3045	ECEA1CU100	ELECTROLYTIC	16V	10μF
C3046	ECEA1CN100	ELECTROLYTIC	16V	10μF
C3047	ECEA1CN100	ELECTROLYTIC	16V	10μF
C3048	ECEA1CN100	ELECTROLYTIC	16V	10μF
C3049	ECEA1CN100	ELECTROLYTIC	16V	10μF
C3050	ECEA1CN221	ELECTROLYTIC	16V	220μF

Ref No.	Part No.	Description		
C3051	ECEA1CN100	ELECTROLYTIC	16V	10μF
C3052	ECEA1CU221	ELECTROLYTIC	16V	220μF
C3053	ECEA1CN100	ELECTROLYTIC	16V	10μF
C3054	ECEA1CN100	ELECTROLYTIC	16V	10μF
C3055	ECEA1CN100	ELECTROLYTIC	16V	10μF
C3056	ECEA1CN100	ELECTROLYTIC	16V	10μF
C3057	ECEA1CU100	ELECTROLYTIC	16V	10μF
C3058	ECQV1H104JZ	PLASTIC FILM	50V	100nF
C3059	ECKC1H103JB	CERAMIC	50V	10nF
C3060	ECEA1CU221	ELECTROLYTIC	16V	220μF
C3061	ECKC1H103JB	CERAMIC	50V	10nF
C3077	ECEA1HN2R2	ELECTROLYTIC	50V	2.2μF
C3078	ECEA1HN2R2	ELECTROLYTIC	50V	2.2μF
C3079	ECKC1H103JB	CERAMIC	50V	10nF
C3172	ECEA1CU470	ELECTROLYTIC	16V	47μF
C3173	ECEA1CU470	ELECTROLYTIC	16V	47μF
C3174	ECKC1H222J	CERAMIC	50V	2.2nF
C3175	ECKC1H222J	CERAMIC	50V	2.2nF
C3176	ECKC1H561J	CERAMIC	50V	560pF
C3177	ECKC1H561J	CERAMIC	50V	560pF
C3179	ECEA1CU471	ELECTROLYTIC	16V	470μF
C3180	ECEA1CU471	ELECTROLYTIC	16V	470μF
C3181	ECEA1EN4R7	ELECTROLYTIC	25V	4.7μF
C3182	ECEA1EN4R7	ELECTROLYTIC	25V	4.7μF
C3185	ECEA1CN470	ELECTROLYTIC	16V	47μF
C3186	ECQV1H104JZ	PLASTIC FILM	50V	100nF
C3187	ECQV1H104JZ	PLASTIC FILM	50V	100nF
C3188	ECQV1H104JZ	PLASTIC FILM	50V	100nF
C3190	ECQV1H224JZ	PLASTIC FILM	50V	220nF
C3191	ECQV1H104JZ	PLASTIC FILM	50V	100nF
C3192	ECQV1H104JZ	PLASTIC FILM	50V	100nF
C3193	ECQV1H104JZ	PLASTIC FILM	50V	100nF
C3194	ECEA1CN100	ELECTROLYTIC	16V	10μF
C3303	ECEA1CU331	ELECTROLYTIC	16V	330μF
C3304	ECQV1H104JZ	PLASTIC FILM	50V	100nF
C3305	ECQV1H104JZ	PLASTIC FILM	50V	100nF
C3306	ECQV1H104JZ	PLASTIC FILM	50V	100nF
C3502	ECCR1H150J	CERAMIC	50V	15pF
C3503	ECKC1H102J	CERAMIC	50V	1.0nF
C3504	ECKC1H471J	CERAMIC	50V	470pF
C3505	ECQB1H223K	PLASTIC FILM	50V	22nF
C3506	ECKC1H271J	CERAMIC	50V	270pF
C3507	ECCR1H101J	CERAMIC	50V	100pF
C3508	ECCR1H150J	CERAMIC	50V	15pF
C3509	ECCR1H270J	CERAMIC	50V	27pF
C3510	ECQB1H683K	PLASTIC FILM	50V	68nF
C3511	ECCR1H221J	CERAMIC	50V	220pF
C3512	ECQB1H473K	PLASTIC FILM	50V	47nF
C3513	ECEA1CU100	ELECTROLYTIC	16V	10μF
C3514	ECQB1H272K	PLASTIC FILM	50V	2.7nF
C3515	ECQB1H473K	PLASTIC FILM	50V	47nF
C3516	ECQV1H224JZ	PLASTIC FILM	50V	220nF
C3517	ECKC1H103JB	CERAMIC	50V	10nF
C3518	ECQV1H104JZ	PLASTIC FILM	50V	100nF
C3521	ECQV1H104JZ	PLASTIC FILM	50V	100nF
C3522	ECEA1HU2R2	ELECTROLYTIC	50V	2.2μF
C3523	ECEA0JU101	ELECTROLYTIC	6.3V	100μF
C3524	ECEA0JU222	ELECTROLYTIC	6.3V	2200μF
C3525	ECQV1H104JZ	PLASTIC FILM	50V	100nF
C3526	ECEA1CU100	ELECTROLYTIC	16V	10μF
C3527	ECCR1H180J	CERAMIC	50V	18pF
C3528	ECRLA020E53R	TRIMMER CAPACITOR		20pF
C3532	ECKC1H103JB	CERAMIC	50V	10nF
C3533	ECQB1H223K	PLASTIC FILM	50V	22nF
C3534	ECEA1CU220	ELECTROLYTIC	16V	22μF
C3536	ECKC1H103JB	CERAMIC	50V	10nF
C3540	ECQV1H104JZ	PLASTIC FILM	50V	100nF
C3550	ECEA1HN010	ELECTROLYTIC	50V	0.1μF
C3552	ECKC1H103JB	CERAMIC	50V	10nF
C3553	ECEA1CU221	ELECTROLYTIC	16V	220μF
C3554	ECCR1H100J	CERAMIC	50V	10pF
C3555	ECEA1CN330	ELECTROLYTIC	16V	33μF
C3556	ECCR1H470J	CERAMIC	50V	47pF
C3557	ECCR1H330J	CERAMIC	50V	33pF
C3558	ECRBA160N11	TRIMMER CAPACITOR		160pF
C3559	ECCR1H560J	CERAMIC	50V	56pF
C3563	ECEA1CU101	ELECTROLYTIC	16V	100μF
C3564	ECKC1H103JB	CERAMIC	50V	10nF
C3565	ECCR1H070J	CERAMIC	50V	07pF
C3566	ECQB1H152K	PLASTIC FILM	50V	1.5nF
C3567	ECQB1H152K	PLASTIC FILM	50V	1.5nF
C3568	ECQB1H152K	PLASTIC FILM	50V	1.5nF

Ref No.	Part No.	Description		
C3570	ECEA0JU471	ELECTROLYTIC	6.3V	470μF
C3601	ECKC1H103JB	CERAMIC	50V	10nF
C3602	ECEA1HU010	ELECTROLYTIC	50V	01μF
C3603	ECEA0JU471	ELECTROLYTIC	6.3V	470μF
C3604	ECQV1H104JZ	PLASTIC FILM	50V	100nF
C3608	ECCR1H180J	CERAMIC	50V	18pF
C3611	ECCR1H180J	CERAMIC	50V	18pF

DIODES

D19	MA4047	DIODE
D132	TVSQB109SA	DIODE
D171	EU02	DIODE
D300	MA4036	DIODE
D304	MA858TA5	DIODE
D305	MA4130	DIODE
D306	MA4130	DIODE
D307	MA4130	DIODE
D309	MA858TA5	DIODE
D310	MA165TA5	DIODE
D311	MA165TA5	DIODE
D313	MA27TA5	DIODE
D314	MA4033	DIODE
D316	MA165TA5	DIODE
D319	MA165TA5	DIODE
D320	MA165TA5	DIODE
D321	MA165TA5	DIODE
D328	MA4056	DIODE
D329	MA4068HTA	DIODE
D331	MA4062	DIODE
D351	MA167TA5	DIODE
D352	MA182TA	DIODE
D371	MA4062	DIODE
D372	MA4062	DIODE
D373	MA4062	DIODE
D374	MA165TA5	DIODE
D375	MA4056	DIODE
D404	MA165TA5	DIODE
D409	MA27TA5	DIODE
D451	ERA15-02V3	DIODE
D452	MA165TA5	DIODE
D453	MA165TA5	DIODE
D501	ERA15-02V3	DIODE
D502	MA700TA5	DIODE
D505	MA165TA5	DIODE
D511	MA4047	DIODE
D531	MA165TA5	DIODE
D532	MA4051	DIODE
D541	MA4360	DIODE
D546	MA4033	DIODE
D548	MA4075	DIODE
D551	ERA22-02V3	DIODE
D552	MA167TA5	DIODE
D553	ERA22-02V3	DIODE
D600	MA858TA5	DIODE
D601	MA858TA5	DIODE
D602	MA165TA5	DIODE
D603	MA4047	DIODE
D604	MA165TA5	DIODE
D605	MA4056	DIODE
D606	MA165TA5	DIODE
D607	MA700TA5	DIODE
D608	MA4062	DIODE
D609	MA4062	DIODE
D612	MA700TA5	DIODE
D615	MA4047	DIODE
D616	MA165TA5	DIODE
D701	MA165TA5	DIODE
D702	MA4360	DIODE
D751	ERB06-15	DIODE
D752	TVSRU2AM	DIODE
D825	RBV4-08	DIODE
D826	ERA22-04V3	DIODE
D827	ERA22-08V3	DIODE
D828	ERZC10DK621	DIODE
D829	232266296009	DIODE
D830	MA170TA5	DIODE
D831	ERA22-02V3	DIODE
D834 ⚠	TLP621GR-LF2	PHOTO COUPLER
D835	MA170TA5	DIODE
D837	MA165TA5	DIODE

Ref No.	Part No.	Description	
D842	MA4100	DIODE	
D846	MA165TA5	DIODE	
D851	RU4BLF-L1	TRANSISTOR	
D852	TVSRU2AM	DIODE	
D853	RU4AMLF-M1	TRANSISTOR	
D854	TVSSR2KL	DIODE	
D855	MA649RL	DIODE	
D857	MA4120	DIODE	
D858	MA165TA5	DIODE	
D859	MA165TA5	DIODE	
D860	EU02	DIODE	
D901	MA4120	DIODE	
D902	MA700TA5	DIODE	
D921	MA700TA5	DIODE	
D951	MA165TA5	DIODE	
D952	MA165TA5	DIODE	
D955	MA29TA5	DIODE	
D957	MA179TA	DIODE	
D958	MA179TA	DIODE	
D960	MA165TA5	DIODE	
D961	MA165TA5	DIODE	
D1051	PN323B-LFHT	DIODE	
D1106	MA165TA5	DIODE	
D1112	MA165TA5	DIODE	
D1116	MA165TA5	DIODE	
D1120	MA165TA5	DIODE	
D1123	MA165TA5	DIODE	
D1124	MA165TA5	DIODE	
D1127	MA165TA5	DIODE	
D1128	MA165TA5	DIODE	
D1129	MA165TA5	DIODE	
D1130	MA165TA5	DIODE	
D1131	MA165TA5	DIODE	
D1132	MA165TA5	DIODE	
D1133	MA4062	DIODE	
D1134	MA4062	DIODE	
D1135	MA4062	DIODE	
D1136	MA4062	DIODE	
D1151	LN81RPHL	DIODE	
D1200	MA4047	DIODE	
D1202	MA165TA5	DIODE	
D1203	MA165TA5	DIODE	
D1204	MA165TA5	DIODE	
D1205	MA165TA5	DIODE	
D1206	MA4047	DIODE	
D1208	MA165TA5	DIODE	
D1212	MA165TA5	DIODE	
D1214	MA165TA5	DIODE	
D1215	MA4047	DIODE	
D1217	MA4022	DIODE	
D1218	MA165TA5	DIODE	
D1235	MA165TA5	DIODE	
D1236	MA4056	DIODE	
D1243	MA165TA5	DIODE	
D1291	TVSS1WBS10	DIODE	
D2201	MA4047	DIODE	
D2260	MA165TA5	DIODE	
D2261	MA165TA5	DIODE	
D2401	MA165TA5	DIODE	
D2405	MA4051	DIODE	
D2406	MA4051	DIODE	
D2451	MA4022	DIODE	
D2628	MA858TA5	DIODE	
D3170	MA165TA5	DIODE	
D3171	MA165TA5	DIODE	
D3173	MA165TA5	DIODE	
D3174	MA165TA5	DIODE	
D3175	MA165TA5	DIODE	
D3300	MA165TA5	DIODE	
D3301	MA165TA5	DIODE	
D3302	MA165TA5	DIODE	
D3303	MA165TA5	DIODE	
D3304	MA165TA5	DIODE	
D3305	MA165TA5	DIODE	
D3306	MA165TA5	DIODE	
D3307	MA165TA5	DIODE	
D3308	MA165TA5	DIODE	
D3309	MA165TA5	DIODE	
D3310	MA165TA5	DIODE	
D3331	MA4056	DIODE	
D3332	MA165TA5	DIODE	
D3333	MA29TA5	DIODE	
D3542	ERD25TJ102	CARBON 0.25W 5%	1.0KΩ

INTEGRATED CIRCUITS

Ref No.	Part No.	Description
IC70	UPC574J	REGULATOR
IC101	M51362SP	MULTI / VIF
IC179	L78M12MRB	12V REGULATOR
IC180	AN5421	SYNC DETECTOR
IC301	CX20125	BLACK LEVEL EXPANDER
IC302	TDA4670	PICTURE SIGNAL IMPROV.
IC303	TDA3505	VIDEO CONTROL
IC451	AN5521	VERTICAL CONTROL
IC501	TDA2579A	SYNC CIRCUIT
IC601	TDA4650	COLOUR DECODER
IC602	TDA4660	LINE MEMORY
IC603	MN4053B	DIODE
IC651	TDA4565	CTI
IC701	TDA8145	E/W/ CORRECTION
IC826	SE140N	TRANSISTOR
IC891	L78M12MRB	12V REGULATOR
IC1051	UPC1475HA	REMOTE CONTROL DECODER
IC1101	MN8303	DIODE
IC1204	L78M05MRB	5V REGULATOR
IC1211	M6M80021P	MEMORY
IC1212	MN1280R	RESET
IC1213	MN1871611TBU	MICROPROCESSOR
IC2102	AN5215	SIF SECAM
IC2201	AN5803	STEREO MULIPLEX
IC2351	STK4392TV	AUDIO AMPLIFIER
IC2402	TA8184P	AUDIO AMPLIFIER
IC2403	MN1280R	RESET
IC2451	TDA3810	AMBIENCE CTRL
IC3301	AN5862K	RGB SWITCHING - 1
IC3302	AN5862K	RGB SWITCHING - 2

SURFACE MOUNTED LINKS

JC.01	ERJ6GMY0R00	S.M.LINK	0.00
JC.02	ERJ6GMY0R00	S.M.LINK	0.00
JC.03	ERJ6GMY0R00	S.M.LINK	0.00
JC.04	ERJ6GMY0R00	S.M.LINK	0.00

COILS

Ref No.	Part No.	Description
L12	ELESN181KA	COIL
L13	EXCELDR35V	COIL
L14	TSC937	CHOKE
L101	ELESNR82KA	COIL
L102	ELESN4R7KA	COIL
L105	EIV7EN054B	COIL
L106	EIV7EN055B	COIL
L110	EIV7ES711B	COIL
L112	TLT392K991R	COIL
L121	ELESN100KA	COIL
L130	ELESN220KA	COIL
L131	ELESN680KA	COIL
L133	ELESN150KA	COIL
L137	ELESN180KA	COIL
L351	ELESN181KA	COIL
L352	ELESN181KA	COIL
L353	ELESN181KA	COIL
L354	TLT047L991R	COIL
L355	EXCELDR35V	COIL
L356	EXCELDR35V	COIL
L357	EXCELDR35V	COIL
L451	ELESN8R2KA	COIL
L453	ELEBT2R7KA	COIL
L551	EXCELDR35C	COIL
L552	ELC08D055	COIL
L553	ELH5L421	COIL
L554	ELC15B004	COIL
L600	EIK7EG011B	COIL
L603	EIK7ES717B	COIL
L604	ELEXT100KA	COIL
L605	ELESN8R2KA	COIL
L651	ELESN100KA	COIL
L681	TLT220K991R	COIL
L682	TLT390K991R	COIL
L701	ELESN8R2KA	COIL
L751	ELC10D006	COIL
L801 ⚠	ELF18D690A	COIL
L813 ⚠	ELF18D690A	COIL
L825	EXCELSA35T	COIL
L851	EXCELSA35T	COIL
L854	EXCELSA35T	COIL
L891	ELESN100KA	COIL
L901	ELESN330KA	COIL
L904	EXCELSA35T	COIL
L951	ELESN150KA	COIL
L952	EXCELSA35T	COIL
L953	EXCELSA35T	COIL
L954	EXCELSA35T	COIL
L955	EXCELSA35T	COIL
L957	EXCELSA35T	COIL
L958	EXCELSA35T	COIL
L959	EXCELSA35T	COIL
L1051	TLT542K991K	COIL
L1052	EIR7QG001B	COIL
L1200	ELEXT100KA	COIL
L1201	ELEXT100KA	COIL
L1202	ELEXT100KA	COIL
L1203	ELEXT100KA	COIL
L1204	ELKTR150GA	COIL
L1206	ELEXT100KA	COIL
L1207	ELEXT100KA	COIL
L1208	ELEXT100KA	COIL
L1209	ELEXT100KA	COIL
L1210	ERD25TC0T	WIRE LINK
L1211	ELEXT100KA	COIL
L1212	ELEXT100KA	COIL
L1213	ELEXT100KA	COIL
L1214	ELEXT100KA	COIL
L1215	ELEXT100KA	COIL
L1216	ELEXT100KA	COIL
L1217	ELEXT100KA	COIL
L1218	ELEXT100KA	COIL
L1219	ELEXT100KA	COIL
L1220	ELEXT100KA	COIL
L1221	ELEXT100KA	COIL
L1222	ELEXT100KA	COIL
L1223	ELEXT100KA	COIL
L1224	ELEXT100KA	COIL
L1225	ELEXT100KA	COIL
L1226	ELEXT100KA	COIL
L1227	ELEXT100KA	COIL
L1228	ELEXT100KA	COIL
L1229	ELEXT100KA	COIL
L1230	ELEXT100KA	COIL
L1231	ELEXT100KA	COIL
L1232	ELKTR150GA	COIL
L1233	ELKTR150GA	COIL
L1234	ELKTR150GA	COIL
L1235	ELEXT100KA	COIL
L1236	EXCELSA35T	COIL
L1238	ELEXT6R8KA	COIL
L1239	ELEXT1R0KA	COIL
L1240	ELESN100KA	COIL
L1241	ELEXT100KA	COIL
L1242	ELEXT100KA	COIL
L1243	ELEXT100KA	COIL
L1244	ELEXT100KA	COIL
L1245	ELEXT100KA	COIL
L1246	ELEXT1R0KA	COIL
L1247	ELEXT100KA	COIL
L1248	ELEXT100KA	COIL
L1249	ELESN100KA	COIL
L1250	ELEXT100KA	COIL
L1252	ELEXT100KA	COIL
L1253	ELEXT100KA	COIL
L1254	ELEXT100KA	COIL
L1255	ELEXT100KA	COIL
L2102	ELESN1R2KA	COIL
L2103	ELESN680KA	COIL
L2105	ELESN4R7KA	COIL
L2106	ELESN1R2KA	COIL
L2110	EIS7EN036B	COIL
L2112	EIS7ES006B	COIL
L2201	EIR7QG017B	COIL
L2202	ELESN102KA	COIL
L2451	ELESN100KA	COIL
L2601	TLS159054E	COIL
L2602	TLS159054E	COIL

Ref No.	Part No.	Description
L2603	TLS159054E	COIL
L2604	TLS159054E	COIL
L2651	TLS159054E	COIL
L2652	TLS159054E	COIL
L2653	TLS159054E	COIL
L2654	TLS159054E	COIL
L3001	ELESN100KA	COIL
L3006	ELESN100KA	COIL
L3171	EXCELDR35V	COIL
L3172	EXCELDR35V	COIL
L3173	ELESN121KA	COIL
L3501	ELESN150KA	COIL
L3502	ELESN100KA	COIL
L3503	ELESN4R7KA	COIL
L3601	ELESN100KA	COIL
LC101	ELB5A077	COIL
LC103	ELB5A083	COIL
LC601	TLK153052E	COIL
LC2148	ELB5A072	COIL

TRANSISTORS

Q101	2SC3311ATA	TRANSISTOR
Q120	2SA564-S	TRANSISTOR
Q130	2SA1309ATA	TRANSISTOR
Q131	BF370	TRANSISTOR
Q180	2SC3311ATA	TRANSISTOR
Q301	2SC3311ATA	TRANSISTOR
Q302	2SC3311ATA	TRANSISTOR
Q303	2SC3311ATA	TRANSISTOR
Q307	UN4214TA	TRANSISTOR
Q309	2SC3311ATA	TRANSISTOR
Q318	2SC3311ATA	TRANSISTOR
Q351	2SC2923-RL	TRANSISTOR
Q352	2SC2923-RL	TRANSISTOR
Q353	2SC2923-RL	TRANSISTOR
Q354	2SA564-S	TRANSISTOR
Q355	2SC3311ATA	TRANSISTOR
Q365	2SC3311ATA	TRANSISTOR
Q366	2SC3311ATA	TRANSISTOR
Q367	2SC3311ATA	TRANSISTOR
Q401	2SC3311ATA	TRANSISTOR
Q402	2SC3311ATA	TRANSISTOR
Q502	2SC3311ATA	TRANSISTOR
Q503	2SC3311ATA	TRANSISTOR
Q504	2SC3311ATA	TRANSISTOR
Q531	2SD836-AL	TRANSISTOR
Q541	2SA1309ATA	TRANSISTOR
Q542	2SC3311ATA	TRANSISTOR
Q543	2SA1309ATA	TRANSISTOR
Q544	2SC3311ATA	TRANSISTOR
Q551	2SD1441-RL	TRANSISTOR
Q602	2SC3311ATA	TRANSISTOR
Q603	2SC3311ATA	TRANSISTOR
Q605	2SC3311ATA	TRANSISTOR
Q606	2SC3311ATA	TRANSISTOR
Q609	2SC3311ATA	TRANSISTOR
Q610	2SC3311ATA	TRANSISTOR
Q654	UN4213TA	TRANSISTOR
Q673	2SD965-R	TRANSISTOR
Q674	2SA1309ATA	TRANSISTOR
Q675	2SC3311ATA	TRANSISTOR
Q701	UN4211TA	TRANSISTOR
Q821	2SC4557F713	TRANSISTOR
Q822	2SD965-R	TRANSISTOR
Q823	2SD965-R	TRANSISTOR
Q825	2SC3311ATA	TRANSISTOR
Q826	UN4214TA	TRANSISTOR
Q827	2SB873-Q	TRANSISTOR
Q901	2SC3311ATA	TRANSISTOR
Q902	2SC3311ATA	TRANSISTOR
Q903	2SC3311ATA	TRANSISTOR
Q904	2SC3311ATA	TRANSISTOR
Q905	2SA1309ATA	TRANSISTOR
Q906	2SA1309ATA	TRANSISTOR
Q907	2SC3311ATA	TRANSISTOR
Q909	2SC3311ATA	TRANSISTOR
Q910	2SC3311ATA	TRANSISTOR
Q911	2SC3311ATA	TRANSISTOR
Q951	2SC3311ATA	TRANSISTOR
Q952	2SC3311ATA	TRANSISTOR
Q953	2SD1423ATA	TRANSISTOR
Q954	2SA720-RS	TRANSISTOR

Ref No.	Part No.	Description
Q955	2SB940APLB	TRANSISTOR
Q956	2SD1264APLB	TRANSISTOR
Q1200	2SC3311ATA	TRANSISTOR
Q1201	2SC3311ATA	TRANSISTOR
Q1202	2SA1309ATA	TRANSISTOR
Q1203	UN4211TA	TRANSISTOR
Q1215	2SC3311ATA	TRANSISTOR
Q1216	2SC3311ATA	TRANSISTOR
Q2101	2SC1047-BCD	TRANSISTOR
Q2102	2SC3354TA	TRANSISTOR
Q2103	2SC3311ATA	TRANSISTOR
Q2201	2SC3311ATA	TRANSISTOR
Q2202	2SA1309ATA	TRANSISTOR
Q2203	2SC3311ATA	TRANSISTOR
Q2204	2SC3311ATA	TRANSISTOR
Q2403	2SC3311ATA	TRANSISTOR
Q2404	2SC3311ATA	TRANSISTOR
Q2407	2SA1309ATA	TRANSISTOR
Q3171	2SC3311ATA	TRANSISTOR
Q3172	2SC3311ATA	TRANSISTOR
Q3173	2SC3311ATA	TRANSISTOR
Q3174	2SC1318-S	TRANSISTOR
Q3175	2SA1309ATA	TRANSISTOR
Q3177	UN4211TA	TRANSISTOR
Q3303	2SA1309ATA	TRANSISTOR
Q3311	2SA1309ATA	TRANSISTOR

RESISTORS

R11	ERD25TJ223	CARBON 0.25W 5%	22KΩ
R12	ERD25TJ101	CARBON 0.25W 5%	100Ω
R13	ERD25TJ101	CARBON 0.25W 5%	100Ω
R18	ERJ6GMYJ103	S.M. CARBON 0.1W 1%	10KΩ
R70	ERG1ANJ822	METAL 1W ⚠ 5%	8.2KΩ
R17	ERG1ANJ101	METAL 1W ⚠ 5%	100Ω
R120	ERD25TJ272	CARBON 0.25W 5%	2.7KΩ
R121	ERJ6GMYJ101	S.M. CARBON 0.1W 1%	100Ω
R125	ERJ6GMYJ221	S.M. CARBON 0.1W 1%	220Ω
R128	EVND1AA00B53	RF AGC	5KΩ
R130	ERD25TJ222	CARBON 0.25W 5%	2.2KΩ
R131	ERJ6GMYJ152	S.M. CARBON 0.1W 1%	1.5KΩ
R133	ERJ6GMYJ302	S.M. CARBON 0.1W 1%	33KΩ
R134	ERJ6GMYJ392	S.M. CARBON 0.1W 1%	3.9KΩ
R136	ERD25TJ822	CARBON 0.25W 5%	8.2KΩ
R137	ERJ6GMYJ824	S.M. CARBON 0.1W 1%	820KΩ
R138	ERJ6GMYJ561	S.M. CARBON 0.1W 1%	560Ω
R139	ERJ6GMYJ102	S.M. CARBON 0.1W 1%	1.0KΩ
R141	ERJ6GMYJ122	S.M. CARBON 0.1W 1%	1.2KΩ
R143	ERD25TJ331	CARBON 0.25W 5%	330Ω
R144	ERJ6GMYJ473	S.M. CARBON 0.1W 1%	47KΩ
R145	ERD25TJ470	CARBON 0.25W 5%	47Ω
R146	ERJ6GMYJ471	S.M. CARBON 0.1W 1%	470Ω
R147	ERJ6GMYJ334	S.M. CARBON 0.1W 1%	330KΩ
R148	ERJ6GMYJ334	S.M. CARBON 0.1W 1%	330KΩ
R149	ERQ12HJ330	FILM 0.5W 5% ⚠	33Ω
R150	ERD25TJ561	CARBON 0.25W 5%	560Ω
R151	ERJ6GMYJ391	S.M. CARBON 0.1W 1%	390Ω
R152	ERD25TJ101	CARBON 0.25W 5%	100Ω
R153	ERJ6GMYJ100	S.M. CARBON 0.1W 1%	10Ω
R154	ERJ6GMYJ103	S.M. CARBON 0.1W 1%	10KΩ
R159	ERJ6GMYJ392	S.M. CARBON 0.1W 1%	3.9KΩ
R160	ERD25TJ221	CARBON 0.25W 5%	220Ω
R161	ERD25TJ221	CARBON 0.25W 5%	220Ω
R162	ERJ6GMYJ392	S.M. CARBON 0.1W 1%	3.9KΩ
R163	ERD25TJ103	CARBON 0.25W 5%	10KΩ
R164	ERD25TJ102	CARBON 0.25W 5%	1.0KΩ
R177	ERG2ANJ270	METAL 2W ⚠ 5%	27Ω
R180	ERD25TJ471	CARBON 0.25W 5%	470Ω
R181	ERD25TJ471	CARBON 0.25W 5%	470Ω
R182	ERD25TJ562	CARBON 0.25W 5%	5.6KΩ
R183	ERD25TJ472	CARBON 0.25W 5%	4.7KΩ
R184	ERD25TJ104	CARBON 0.25W 5%	100KΩ
R185	ERD25TJ151	CARBON 0.25W 5%	150Ω
R186	EVNDXAA00B23	H.F. ADJUST (MUTE)	2KΩ
R187	ERD25TJ562	CARBON 0.25W 5%	5.6KΩ
R188	ERD25TJ393	CARBON 0.25W 5%	39KΩ
R189	ERD25TJ222	CARBON 0.25W 5%	2.2KΩ
R190	ERD25TJ104	CARBON 0.25W 5%	100KΩ
R191	ERD25TJ822	CARBON 0.25W 5%	8.2KΩ
R192	ERD25TJ332	CARBON 0.25W 5%	3.3KΩ
R193	ERD25TJ393	CARBON 0.25W 5%	39KΩ
R300	ERD25TJ152	CARBON 0.25W 5%	1.5KΩ

Ref No.	Part No.	Description	
R301	ERD25TJ102	CARBON 0.25W 5%	1.0KΩ
R302	ERD25TJ223	CARBON 0.25W 5%	22KΩ
R303	ERD25TJ152	CARBON 0.25W 5%	1.5KΩ
R304	ERD25TJ153	CARBON 0.25W 5%	15KΩ
R305	ERD25TJ622	CARBON 0.25W 5%	6.2KΩ
R306	ERD25TJ684	CARBON 0.25W 5%	680KΩ
R307	ERD25TJ182	CARBON 0.25W 5%	1.8KΩ
R308	ERD25TJ152	CARBON 0.25W 5%	1.5KΩ
R309	ERD25TJ391	CARBON 0.25W 5%	390Ω
R310	ERD25TJ182	CARBON 0.25W 5%	1.8KΩ
R311	ERD25TJ222	CARBON 0.25W 5%	2.2KΩ
R312	ERD25TJ392	CARBON 0.25W 5%	3.9KΩ
R313	ERD25TJ122	CARBON 0.25W 5%	1.2KΩ
R314	ERD25TJ102	CARBON 0.25W 5%	1.0KΩ
R315	ERD25TJ223	CARBON 0.25W 5%	22KΩ
R316	ERD25TJ102	CARBON 0.25W 5%	1.0KΩ
R317	EVNDXAA00B54	SUB CONTRAST	50KΩ
R318	ERD25TJ102	CARBON 0.25W 5%	1.0KΩ
R319	ERD25TJ563	CARBON 0.25W 5%	56KΩ
R320	ERD25TJ331	CARBON 0.25W 5%	330Ω
R321	EVNDCAA03B14	SUB BRIGHTNESS	10KΩ
R322	ERD25TJ333	CARBON 0.25W 5%	33KΩ
R323	ERD25TJ223	CARBON 0.25W 5%	22KΩ
R324	ERD25TJ223	CARBON 0.25W 5%	22KΩ
R325	ERD25TJ471	CARBON 0.25W 5%	470Ω
R326	ERD25TJ153	CARBON 0.25W 5%	15KΩ
R328	ERDS1FJ101	CARBON 0.5W 5% ⚠	100Ω
R329	ERD25TJ822	CARBON 0.25W 5%	8.2KΩ
R331	ERD25TJ822	CARBON 0.25W 5%	8.2KΩ
R332	ERD25TJ222	CARBON 0.25W 5%	2.2KΩ
R333	ERD25TJ123	CARBON 0.25W 5%	12KΩ
R335	ERDS1TJ471	CARBON 0.5W 5%	470Ω
R336	ERD25TJ223	CARBON 0.25W 5%	22KΩ
R337	ERD25TJ273	CARBON 0.25W 5%	27KΩ
R338	ERD25TJ102	CARBON 0.25W 5%	1.0KΩ
R340	ERD25TJ102	CARBON 0.25W 5%	1.0KΩ
R344	ERD25TJ102	CARBON 0.25W 5%	1.0KΩ
R345	ERO25CKF3001	METAL 0.25W 5% ⚠	3.00KΩ
R346	ERO25CKF3001	METAL 0.25W 5% ⚠	3.00KΩ
R348	ERD25TJ222	CARBON 0.25W 5%	2.2KΩ
R349	ERD25TJ123	CARBON 0.25W 5%	12KΩ
R351	ERG2ANJ123	METAL 2W 5% ⚠	12KΩ
R352	ERG2ANJ123	METAL 2W 5%	12KΩ
R353	ERG3ANJ123	METAL 3W 5% ⚠	12KΩ
R354	ERD25TJ181	CARBON 0.25W 5%	180Ω
R355	ERD25TJ271	CARBON 0.25W 5%	270Ω
R356	ERD25TJ181	CARBON 0.25W 5%	180Ω
R357	EVN65UA00B22	GREEN DRIVE	200Ω
R358	EVN65UA00B22	RED DRIVE	200Ω
R359	ERD25TJ471	CARBON 0.25W 5%	470Ω
R360	ERD25TJ471	CARBON 0.25W 5%	470Ω
R361	ERD25TJ471	CARBON 0.25W 5%	470Ω
R362	EVN65UA00B53	GREEN CUT OFF	5KΩ
R363	EVN65UA00B53	BLUE CUT OFF	5KΩ
R364	EVN65UA00B53	RED CUT OFF	5KΩ
R365	ERDS1FJ152	CARBON 0.5W 5% ⚠	1.5KΩ
R366	ERDS1TJ152	CARBON 0.5W 5%	1.5KΩ
R367	ERDS1TJ152	CARBON 0.5W 5%	1.5KΩ
R371	ERD25TJ270	CARBON 0.25W 5%	27Ω
R372	ERD25TJ270	CARBON 0.25W 5%	27Ω
R373	ERD25TJ270	CARBON 0.25W 5%	27Ω
R374	ERD25TJ274	CARBON 0.25W 5%	270KΩ
R375	ERD25TJ393	CARBON 0.25W 5%	39KΩ
R376	ERD25TJ684	CARBON 0.25W 5%	680KΩ
R378	ERD25TJ103	CARBON 0.25W 5%	10KΩ
R379	ERD25TJ104	CARBON 0.25W 5%	100KΩ
R380	ERD25TJ563	CARBON 0.25W 5%	56KΩ
R381	ERD25TJ102	CARBON 0.25W 5%	1.0KΩ
R382	ERD25TJ225	CARBON 0.25W 5%	2.2MΩ
R384	ERD25TJ101	CARBON 0.25W 5%	100Ω
R390	ERDS1TJ124	CARBON 0.5W 5%	120KΩ
R391	ERD25TJ103	CARBON 0.25W 5%	10KΩ
R392	ERD25TJ561	CARBON 0.25W 5%	560Ω
R393	ERD25TJ561	CARBON 0.25W 5%	560Ω
R394	ERD25TJ561	CARBON 0.25W 5%	560Ω
R402	ERD25TJ102	CARBON 0.25W 5%	1.0KΩ
R403	ERD25TJ184	CARBON 0.25W 5%	180KΩ
R404	ERD25TJ244	CARBON 0.25W 5%	240KΩ
R405	EVNDCAA03B35	VERTICAL HEIGHT	300KΩ
R406	ERD25TJ105	CARBON 0.25W 5%	1.0MΩ
R407	ERD25TJ822	CARBON 0.25W 5%	8.2KΩ
R408	ERD25TJ102	CARBON 0.25W 5%	1.0KΩ
R409	ERD25TJ473	CARBON 0.25W 5%	47KΩ
R410	ERD25TJ562	CARBON 0.25W 5%	5.6KΩ

Ref No.	Part No.	Description	
R411	ERD25TJ125	CARBON 0.25W 5%	1.2MΩ
R413	ERD25TJ183	CARBON 0.25W 5%	18KΩ
R414	ERD25TJ473	CARBON 0.25W 5%	47KΩ
R451	TSF19801	FUSIBLE LINK ⚠	
R452	ERD25TJ392	CARBON 0.25W 5%	3.9KΩ
R453	ERD25TJ332	CARBON 0.25W 5%	3.3KΩ
R454	ERD25TJ392	CARBON 0.25W 5%	3.9KΩ
R455	ERD25TJ1R0	CARBON 0.25W 5%	1.0Ω
R456	ERD25TJ2R0	CARBON 0.25W 5%	2.0Ω
R457	ERD25TJ562	CARBON 0.25W 5%	5.6KΩ
R458	ERD25TJ103	CARBON 0.25W 5%	10KΩ
R459	ERD25TJ303	CARBON 0.25W 5%	30KΩ
R460	ERD25TJ273	CARBON 0.25W 5%	27KΩ
R461	ERD25TJ1R0	CARBON 0.25W 5%	1.0Ω
R462	ERDS1TJ1R8	CARBON 0.5W 5%	1.8Ω
R463	ERD25TJ223	CARBON 0.25W 5%	22KΩ
R464	ERD25TJ561	CARBON 0.25W 5%	560Ω
R465	ERDS1TJ102	CARBON 0.5W 5%	1.0KΩ
R466	ERDS1TJ152	CARBON 0.5W 5%	1.5KΩ
R467	ERD25TJ153	CARBON 0.25W 5%	15KΩ
R468	ERDS1TJ471	CARBON 0.5W 5%	470Ω
R469	ERD25TJ471	CARBON 0.25W 5%	470Ω
R470	ERG2SJU391	METAL 2W 5% ⚠	390Ω
R471	ERD25TJ105	CARBON 0.25W 5%	1.0MΩ
R500	ERD25TJ104	CARBON 0.25W 5%	100KΩ
R502	EVNDXAA00B14	HORIZONTAL HOLD	10KΩ
R503	ERO25CKF3002	METAL 0.25W 5% ⚠	30KΩ
R505	ERD25TJ563	CARBON 0.25W 5%	56KΩ
R506	ERD25TJ682	CARBON 0.25W 5%	6.8KΩ
R507	EVND1AA00B54	HORIZONTAL CENTRE	50KΩ
R508	ERD25TJ273	CARBON 0.25W 5%	27KΩ
R510	ERD25TJ222	CARBON 0.25W 5%	2.2KΩ
R511	ERD25TJ682	CARBON 0.25W 5%	6.8KΩ
R512	ERD25TJ820	CARBON 0.25W 5%	82Ω
R513	ERD25TJ333	CARBON 0.25W 5%	33KΩ
R514	ERD25TJ392	CARBON 0.25W 5%	3.9KΩ
R515	ERD25TJ103	CARBON 0.25W 5%	10KΩ
R516	ERD25TJ562	CARBON 0.25W 5%	5.6KΩ
R517	ERD25TJ392	CARBON 0.25W 5%	3.9KΩ
R518	ERD25TJ391	CARBON 0.25W 5%	390Ω
R519	ERD25TJ562	CARBON 0.25W 5%	5.6KΩ
R520	ERD25TJ153	CARBON 0.25W 5%	15KΩ
R521	ERD25TJ102	CARBON 0.25W 5%	1.0KΩ
R522	ERD25TJ473	CARBON 0.25W 5%	47KΩ
R523	ERD25TJ102	CARBON 0.25W 5%	1.0KΩ
R524	ERD25TJ683	CARBON 0.25W 5%	68KΩ
R525	ERD25TJ823	CARBON 0.25W 5%	82KΩ
R526	ERD25TJ125	CARBON 0.25W 5%	1.2MΩ
R527	ERO25CKF8201	METAL 0.25W 5% ⚠	8.2KΩ
R528	ERO25CKF3901	METAL 0.25W 5% ⚠	3.9KΩ
R529	ERD25TJ101	CARBON 0.25W 5%	100Ω
R531	ERG2ANJ391	METAL 2W 5% ⚠	390Ω
R532	ERD25TJ562	CARBON 0.25W 5%	5.6KΩ
R534	ERD25TJ562	CARBON 0.25W 5%	5.6KΩ
R535	ERD25TJ471	CARBON 0.25W 5%	470Ω
R540	ERD25TJ102	CARBON 0.25W 5%	1.0KΩ
R542	ERD25TJ474	CARBON 0.25W 5%	470KΩ
R543	ERD25TJ103	CARBON 0.25W 5%	10KΩ
R544	ERQ14AJ101	FILM 0.25W 5% ⚠	100Ω
R545	ERD25TJ153	CARBON 0.25W 5%	15KΩ
R546	ERO25CKF1403	METAL 0.25W 5% ⚠	140KΩ
R549	ERD25TJ103	CARBON 0.25W 5%	10KΩ
R551	ERF7ZK3R3	WOUND 7W 10% ⚠	3.3Ω
R553	ERQ12HJ1R2	FILM 0.5W 5% ⚠	1.2Ω
R554	ERD25TJ274	CARBON 0.25W 5%	270KΩ
R555	TSF19102	FUSIBLE LINK ⚠	
R556	ERQ12HJ3R3	FILM 0.5W 5% ⚠	3.3Ω
R557	ERQ12HJ5R6	FILM 0.5W 5% ⚠	5.6Ω
R559	ERD25TJ472	CARBON 0.25W 5%	4.7KΩ
R560	ERD25TJ681	CARBON 0.25W 5%	680Ω
R562	ERD25TJ102	CARBON 0.25W 5%	1.0KΩ
R563	ERD25TJ101	CARBON 0.25W 5%	100Ω
R564	ERD25TJ102	CARBON 0.25W 5%	1.0KΩ
R565	ERQ1CJP102	FILM 1W 5% ⚠	1.0KΩ
R600	ERQ14AJ3R3	FILM 0.25W 5% ⚠	3.3Ω
R604	ERD25TJ183	CARBON 0.25W 5%	18KΩ
R605	ERD25TJ101	CARBON 0.25W 5%	100Ω
R606	EVNDXAA00B54	SUB COLOUR	50KΩ
R608	ERD25TJ221	CARBON 0.25W 5%	220Ω
R609	ERD25TJ822	CARBON 0.25W 5%	8.2KΩ
R610	EVND4AA00B13	SECAM ADJUST	1.0KΩ
R611	ERD25TJ683	CARBON 0.25W 5%	68KΩ
R615	ERD25TJ103	CARBON 0.25W 5%	10KΩ
R616	ERD25TJ101	CARBON 0.25W 5%	100Ω

Ref No.	Part No.	Description
R617	ERD25TJ101	CARBON 0.25W 5% 100Ω
R618	ERD25TJ101	CARBON 0.25W 5% 100Ω
R619	ERD25TJ682	CARBON 0.25W 5% 6.8KΩ
R620	ERD25TJ681	CARBON 0.25W 5% 680Ω
R621	ERD25TJ105	CARBON 0.25W 5% 1.0MΩ
R622	ERD25TJ332	CARBON 0.25W 5% 3.3KΩ
R625	ERD25TJ101	CARBON 0.25W 5% 100Ω
R626	ERD25TJ682	CARBON 0.25W 5% 6.8KΩ
R627	ERD25TJ473	CARBON 0.25W 5% 47KΩ
R628	ERD25TJ472	CARBON 0.25W 5% 4.7KΩ
R629	ERD25TJ123	CARBON 0.25W 5% 12KΩ
R630	ERD25TJ561	CARBON 0.25W 5% 560Ω
R632	ERD25TJ333	CARBON 0.25W 5% 33KΩ
R633	ERD25TJ332	CARBON 0.25W 5% 3.3KΩ
R634	ERD25TJ151	CARBON 0.25W 5% 150Ω
R635	ERD25TJ103	CARBON 0.25W 5% 10KΩ
R636	ERD25TJ123	CARBON 0.25W 5% 12KΩ
R637	ERD25TJ102	CARBON 0.25W 5% 1.0KΩ
R638	ERD25TJ101	CARBON 0.25W 5% 100Ω
R642	ERD25TJ103	CARBON 0.25W 5% 10KΩ
R643	ERD25TJ103	CARBON 0.25W 5% 10KΩ
R645	ERD25TJ332	CARBON 0.25W 5% 3.3KΩ
R646	ERD25TJ102	CARBON 0.25W 5% 1.0KΩ
R647	ERD25TJ103	CARBON 0.25W 5% 10KΩ
R648	ERD25TJ823	CARBON 0.25W 5% 82KΩ
R649	ERD25TJ561	CARBON 0.25W 5% 560Ω
R650	ERD25TJ822	CARBON 0.25W 5% 8.2KΩ
R651	ERD25TJ103	CARBON 0.25W 5% 10KΩ
R651	ERD25TJ470	CARBON 0.25W 5% 47Ω
R652	ERD25TJ333	CARBON 0.25W 5% 33KΩ
R653	ERD25TJ222	CARBON 0.25W 5% 2.2KΩ
R655	ERD25TJ104	CARBON 0.25W 5% 100KΩ
R658	ERD25TJ103	CARBON 0.25W 5% 10KΩ
R659	ERD25TJ102	CARBON 0.25W 5% 1.0KΩ
R660	ERD25TJ102	CARBON 0.25W 5% 1.0KΩ
R662	ERD25TJ101	CARBON 0.25W 5% 100Ω
R663	ERD25TJ101	CARBON 0.25W 5% 100Ω
R665	ERD25TJ103	CARBON 0.25W 5% 10KΩ
R667	ERD25TJ822	CARBON 0.25W 5% 8.2KΩ
R668	ERD25TJ182	CARBON 0.25W 5% 1.8KΩ
R669	ERD25TJ153	CARBON 0.25W 5% 15KΩ
R670	ERD25TJ103	CARBON 0.25W 5% 10KΩ
R671	ERD25TJ104	CARBON 0.25W 5% 100KΩ
R675	ERD25TJ272	CARBON 0.25W 5% 2.7KΩ
R676	ERD25TJ333	CARBON 0.25W 5% 33KΩ
R678	ERD25TJ331	CARBON 0.25W 5% 330Ω
R680	ERD25TJ332	CARBON 0.25W 5% 3.3KΩ
R681	ERD25TJ332	CARBON 0.25W 5% 3.3KΩ
R682	ERD25TJ563	CARBON 0.25W 5% 56KΩ
R690	ERD25TJ223	CARBON 0.25W 5% 22KΩ
R693	ERD25TJ103	CARBON 0.25W 5% 10KΩ
R695	ERD25TJ103	CARBON 0.25W 5% 10KΩ
R701	ERD25TJ100	CARBON 0.25W 5% 10Ω
R702	ERD25TJ6R8	CARBON 0.25W 5% 6.8Ω
R703	ERD25TJ681	CARBON 0.25W 5% 680Ω
R704	EVNDCAA03B15	PARABOLA ADJUST 100KΩ
R705	ERD25TJ472	CARBON 0.25W 5% 4.7KΩ
R706	ERQ14AJ100	FILM 0.25W 5% ⚠ 10Ω
R707	ERD25TJ242	CARBON 0.25W 5% 2.4KΩ
R708	EVNDCAA03B13	WIDTH ADJUST 1KΩ
R709	ERD25TJ153	CARBON 0.25W 5% 15KΩ
R710	ERD25TJ682	CARBON 0.25W 5% 6.8KΩ
R711	ERD25TJ393	CARBON 0.25W 5% 39KΩ
R712	ERD25TJ153	CARBON 0.25W 5% 15KΩ
R713	ERD25TJ393	CARBON 0.25W 5% 39KΩ
R714	EVNDCAA03B33	TRAPEZOID ADJUST 3KΩ
R715	ERD25TJ153	CARBON 0.25W 5% 15KΩ
R716	ERD25TJ133	CARBON 0.25W 5% 13KΩ
R717	ERD25TJ104	CARBON 0.25W 5% 100KΩ
R719	ERD25TJ184	CARBON 0.25W 5% 180KΩ
R751	ERQ12HJ330	FILM 0.5W 5% ⚠ 33Ω
R601	ERC12ZGK335D	SOLID RESISTOR 0.5W 3.3MΩ
R822	ERF10ZK4R7	WOUND 10W 10% ⚠ 4.7Ω
R824	ERG1ANJ104	METAL 1W ⚠ 5% 100KΩ
R825	ERG1ANJ104	METAL 1W ⚠ 5% 100KΩ
R826	ERQ12HJ5R6	FILM 0.5W 5% ⚠ 5.6Ω
R827	ERG2ANJ683	METAL 2W ⚠ 5% 68KΩ
R828	ERG2ANJ150	METAL 2W ⚠ 5% 15Ω
R829	ERD25TJ682	CARBON 0.25W 5% 6.8KΩ
R830	ERQ1CJP3R9	FILM 1W 5% ⚠ 3.9Ω
R831	ERW12PKR15	WOUND 0.5W 5% ⚠ 0.15Ω

Ref No.	Part No.	Description
R832	ERD25TJ471	CARBON 0.25W 5% 470Ω
R833	ERD25TJ104	CARBON 0.25W 5% 100KΩ
R834	ERD75TAJ825	CARBON 0.75W 5% ⚠ 8.2MΩ
R835	ERD25TJ561	CARBON 0.25W 5% 560Ω
R836	ERD25TJ101	CARBON 0.25W 5% 100Ω
R837	ERD25TJ102	CARBON 0.25W 5% 1.0KΩ
R839	ERD25TJ473	CARBON 0.25W 5% 47KΩ
R842	ERD25TJ472	CARBON 0.25W 5% 4.7KΩ
R843	ERD25TJ562	CARBON 0.25W 5% 5.6KΩ
R844	ERD25TJ122	CARBON 0.25W 5% 1.2KΩ
R845	ERD25TJ102	CARBON 0.25W 5% 1.0KΩ
R846	ERD25TJ102	CARBON 0.25W 5% 1.0KΩ
R847	ERD25TJ473	CARBON 0.25W 5% 47KΩ
R851	ERX1ANJR33	METAL FILM 1W 5% ⚠ 0.33Ω
R852	ERF2AKR22	WOUND 2W 10% ⚠ 0.22Ω
R853	ERF2AKR22	WOUND 2W 10% ⚠ 0.22Ω
R854	ERD25TJ102	CARBON 0.25W 5% 1.0KΩ
R856	ERD25TJ102	CARBON 0.25W 5% 1.0KΩ
R857	ERQ14AJ100	FILM 0.25W 5% ⚠ 10Ω
R858	ERG1ANJ103	METAL 1W ⚠ 5% 10KΩ
R860	ERD25TJ102	CARBON 0.25W 5% 1.0KΩ
R862	ERD25TJ102	CARBON 0.25W 5% 1.0KΩ
R891	ERG3SJU330	METAL 3W ⚠ 5% 33Ω
R892	ERD25TJ101	CARBON 0.25W 5% 100Ω
R901	ERD25TJ182	CARBON 0.25W 5% 1.8KΩ
R902	ERD25TJ681	CARBON 0.25W 5% 680Ω
R903	ERD25TJ123	CARBON 0.25W 5% 12KΩ
R904	ERD25TJ562	CARBON 0.25W 5% 5.6KΩ
R906	ERD25TJ102	CARBON 0.25W 5% 1.0KΩ
R907	ERD25TJ124	CARBON 0.25W 5% 120KΩ
R908	ERD25TJ272	CARBON 0.25W 5% 2.7KΩ
R909	ERD25TJ272	CARBON 0.25W 5% 2.7KΩ
R911	ERG1ANJ561	METAL 1W 5% ⚠ 560Ω
R912	ERD25TJ102	CARBON 0.25W 5% 1.0KΩ
R913	ERD25TJ101	CARBON 0.25W 5% 100Ω
R914	ERD25TJ472	CARBON 0.25W 5% 4.7KΩ
R915	ERD25TJ222	CARBON 0.25W 5% 2.2KΩ
R916	ERD25TJ681	CARBON 0.25W 5% 680Ω
R917	ERD25TJ102	CARBON 0.25W 5% 1.0KΩ
R918	ERD25TJ273	CARBON 0.25W 5% 27KΩ
R919	ERD25TJ223	CARBON 0.25W 5% 22KΩ
R920	ERD25TJ102	CARBON 0.25W 5% 1.0KΩ
R921	ERD25TJ222	CARBON 0.25W 5% 2.2KΩ
R922	ERD25TJ152	CARBON 0.25W 5% 1.5KΩ
R923	ERD25TJ222	CARBON 0.25W 5% 2.2KΩ
R924	ERD25TJ122	CARBON 0.25W 5% 1.2KΩ
R925	ERD25TJ222	CARBON 0.25W 5% 2.2KΩ
R926	ERD25TJ222	CARBON 0.25W 5% 2.2KΩ
R927	ERD25TJ122	CARBON 0.25W 5% 1.2KΩ
R928	ERD25TJ222	CARBON 0.25W 5% 2.2KΩ
R929	ERD25TJ122	CARBON 0.25W 5% 1.2KΩ
R930	ERD25TJ152	CARBON 0.25W 5% 1.5KΩ
R950	ERD25TJ821	CARBON 0.25W 5% 820Ω
R951	ERD25TJ681	CARBON 0.25W 5% 680Ω
R952	ERD25TJ103	CARBON 0.25W 5% 10KΩ
R953	ERD25TJ272	CARBON 0.25W 5% 2.7KΩ
R954	ERD25TJ182	CARBON 0.25W 5% 1.8KΩ
R955	ERD25TJ680	CARBON 0.25W 5% 68Ω
R956	ERD25TJ221	CARBON 0.25W 5% 220Ω
R957	ERD25TJ222	CARBON 0.25W 5% 2.2KΩ
R960	ERQ14AJ100	FILM 0.25W 5% ⚠ 10Ω
R961	ERQ12HJ102	FILM 0.5W 5% ⚠ 1.0KΩ
R962	ERQ14AJ820	FILM 0.25W 5% ⚠ 82Ω
R963	ERQ14AJ820	FILM 0.25W 5% ⚠ 82Ω
R964	ERD25TJ122	CARBON 0.25W 5% 1.2KΩ
R965	ERD25TJ563	CARBON 0.25W 5% 56KΩ
R966	ERDS1FYJ471	CARBON 0.5W 10% ⚠ 470Ω
R967	ERD25TJ563	CARBON 0.25W 5% 56KΩ
R968	ERD25TJ122	CARBON 0.25W 5% 1.2KΩ
R969	ERDS1FYJ390	CARBON 0.5W 10% ⚠ 39Ω
R970	ERD25TJ2R7	CARBON 0.25W 5% 2.7Ω
R971	ERD25TJ2R7	CARBON 0.25W 5% 2.7Ω
R972	ERDS1FYJ390	CARBON 0.5W 10% ⚠ 39Ω
R973	ERDS1FYJ101	CARBON 0.5W 10% 100Ω
R974	ERD25TJ222	CARBON 0.25W 5% 2.2KΩ
R985	ERD25TJ821	CARBON 0.25W 5% 820Ω
R1051	ERD25TJ102	CARBON 0.25W 5% 1.0KΩ
R1052	ERD25TJ330	CARBON 0.25W 5% 33Ω
R1053	ERD25TJ103	CARBON 0.25W 5% 10KΩ
R1054	ERD25TJ101	CARBON 0.25W 5% 100Ω
R1055	ERD25TJ223	CARBON 0.25W 5% 22KΩ
R1101	ERD25TJ221	CARBON 0.25W 5% 220Ω
R1103	ERD25TJ102	CARBON 0.25W 5% 1.0KΩ
R1104	ERD25TJ102	CARBON 0.25W 5% 1.0KΩ

Ref No.	Part No.	Description
R1105	ERD25TJ102	CARBON 0.25W 5% 1.0KΩ
R1106	ERD25TJ102	CARBON 0.25W 5% 1.0KΩ
R1107	ERD25TJ102	CARBON 0.25W 5% 1.0KΩ
R1108	ERD25TJ102	CARBON 0.25W 5% 1.0KΩ
R1109	ERD25TJ102	CARBON 0.25W 5% 1.0KΩ
R1110	ERD25TJ102	CARBON 0.25W 5% 1.0KΩ
R1111	ERD25TJ102	CARBON 0.25W 5% 1.0KΩ
R1112	ERD25TJ102	CARBON 0.25W 5% 1.0KΩ
R1200	ERD25TJ104	CARBON 0.25W 5% 100KΩ
R1202	ERD25TJ102	CARBON 0.25W 5% 1.0KΩ
R1203	ERD25TJ102	CARBON 0.25W 5% 1.0KΩ
R1204	ERD25TJ102	CARBON 0.25W 5% 1.0KΩ
R1205	ERD25TJ333	CARBON 0.25W 5% 33KΩ
R1207	ERD25TJ103	CARBON 0.25W 5% 10KΩ
R1209	ERD25TJ472	CARBON 0.25W 5% 4.7KΩ
R1210	ERD25TJ333	CARBON 0.25W 5% 33KΩ
R1212	ERD25TJ562	CARBON 0.25W 5% 5.6KΩ
R1213	ERD25TJ563	CARBON 0.25W 5% 56KΩ
R1214	ERD25TJ563	CARBON 0.25W 5% 56KΩ
R1216	ERD25TJ103	CARBON 0.25W 5% 10KΩ
R1217	ERD25TJ102	CARBON 0.25W 5% 1.0KΩ
R1218	ERD25TJ101	CARBON 0.25W 5% 100Ω
R1219	ERD25TJ101	CARBON 0.25W 5% 100Ω
R1220	ERD25TJ223	CARBON 0.25W 5% 22KΩ
R1221	ERD25TJ102	CARBON 0.25W 5% 1.0KΩ
R1222	ERD25TJ102	CARBON 0.25W 5% 1.0KΩ
R1223	ERD25TJ102	CARBON 0.25W 5% 1.0KΩ
R1224	ERD25TJ101	CARBON 0.25W 5% 100Ω
R1226	ERD25TJ562	CARBON 0.25W 5% 5.6KΩ
R1230	ERD25TJ683	CARBON 0.25W 5% 68KΩ
R1231	ERD25TJ392	CARBON 0.25W 5% 3.9KΩ
R1232	ERD25TJ332	CARBON 0.25W 5% 3.3KΩ
R1233	ERD25TJ332	CARBON 0.25W 5% 3.3KΩ
R1234	ERD25TJ103	CARBON 0.25W 5% 10KΩ
R1235	ERD25TJ123	CARBON 0.25W 5% 12KΩ
R1236	ERD25TJ472	CARBON 0.25W 5% 4.7KΩ
R1237	ERD25TJ103	CARBON 0.25W 5% 10KΩ
R1238	ERD25TJ473	CARBON 0.25W 5% 47KΩ
R1239	ERD25TJ472	CARBON 0.25W 5% 4.7KΩ
R1240	ERD25TJ821	CARBON 0.25W 5% 820Ω
R1241	ERD25TJ563	CARBON 0.25W 5% 56KΩ
R1242	ERD25TJ103	CARBON 0.25W 5% 10KΩ
R1243	ERD25TJ392	CARBON 0.25W 5% 3.9KΩ
R1245	ERD25TJ823	CARBON 0.25W 5% 82KΩ
R1246	ERD25TJ392	CARBON 0.25W 5% 3.9KΩ
R1247	ERD25TJ182	CARBON 0.25W 5% 1.8KΩ
R1248	ERD25TJ822	CARBON 0.25W 5% 8.2KΩ
R1251	ERD25TJ822	CARBON 0.25W 5% 8.2KΩ
R1253	ERD25TJ123	CARBON 0.25W 5% 12KΩ
R1256	ERD25TJ562	CARBON 0.25W 5% 5.6KΩ
R1257	ERD25TJ562	CARBON 0.25W 5% 5.6KΩ
R1259	ERD25TJ681	CARBON 0.25W 5% 680Ω
R1260	ERD25TJ123	CARBON 0.25W 5% 12KΩ
R1261	ERD25TJ563	CARBON 0.25W 5% 56KΩ
R1262	ERD25TJ222	CARBON 0.25W 5% 2.2KΩ
R1264	ERD25TJ103	CARBON 0.25W 5% 10KΩ
R1265	ERD25TJ562	CARBON 0.25W 5% 5.6KΩ
R1271	ERD25TJ103	CARBON 0.25W 5% 10KΩ
R1273	ERD25TJ392	CARBON 0.25W 5% 3.9KΩ
R1275	ERD25TJ103	CARBON 0.25W 5% 10KΩ
R1287	ERD25TJ562	CARBON 0.25W 5% 5.6KΩ
R1291	TSF19631	FUSIBLE LINK ⚠
R2101	ERJ6GMYJ102	S.M. CARBON 0.1W 1% 1.0KΩ
R2102	ERJ6GMYJ470	S.M. CARBON 0.1W 1% 47Ω
R2103	ERJ6GMYJ562	S.M. CARBON 0.1W 1% 5.6KΩ
R2104	ERJ6GMYJ562	S.M. CARBON 0.1W 1% 5.6KΩ
R2105	ERJ6GMYJ391	S.M. CARBON 0.1W 1% 390Ω
R2106	ERJ6GMYJ680	S.M. CARBON 0.1W 1% 68Ω
R2107	ERJ6GMYJ103	S.M. CARBON 0.1W 1% 10KΩ
R2108	ERJ6GMYJ102	S.M. CARBON 0.1W 1% 1.0KΩ
R2110	ERD2FCG330	FILM 0.25W 5% 33Ω
R2111	ERJ6GMYJ122	S.M. CARBON 0.1W 1% 1.2KΩ
R2112	ERD25TJ103	CARBON 0.25W 5% 10KΩ
R2113	ERJ6GMYJ182	S.M. CARBON 0.1W 1% 1.8KΩ
R2114	ERD25TJ333	CARBON 0.25W 5% 33KΩ
R2115	ERD25TJ103	CARBON 0.25W 5% 10KΩ
R2116	ERD25TJ222	CARBON 0.25W 5% 2.2KΩ
R2117	ERD25TJ102	CARBON 0.25W 5% 1.0KΩ
R2118	ERJ6GMYJ331	S.M. CARBON 0.1W 1% 330Ω
R2119	ERJ6GMYJ822	S.M. CARBON 0.1W 1% 8.2KΩ
R2120	ERJ6GMYJ331	S.M. CARBON 0.1W 1% 330Ω
R2121	ERQ14AJ100	FILM 0.25W 5% ⚠ 10Ω
R2134	ERD25TJ271	CARBON 0.25W 5% 270Ω
R2135	ERD25TJ471	CARBON 0.25W 5% 470Ω

Ref No.	Part No.	Description
R2136	ERQ14AJ330	FILM 0.25W 5% ⚠ 33Ω
R2137	ERD25TJ182	CARBON 0.25W 5% 1.8KΩ
R2201	ERD25TJ474	CARBON 0.25W 5% 470KΩ
R2203	ERD25TJ104	CARBON 0.25W 5% 100KΩ
R2204	ERD25TJ273	CARBON 0.25W 5% 27KΩ
R2205	ERD25TJ102	CARBON 0.25W 5% 1.0KΩ
R2206	ERD25TJ562	CARBON 0.25W 5% 5.6KΩ
R2207	ERD25TJ563	CARBON 0.25W 5% 56KΩ
R2208	ERD25TJ224	CARBON 0.25W 5% 220KΩ
R2209	EVNDXAA00B52	STEREO ADJUST 500Ω
R2210	EVNDXAA00B32	CONTROL 300Ω
R2211	ERD25TJ473	CARBON 0.25W 5% 47KΩ
R2212	ERD25TJ393	CARBON 0.25W 5% 39KΩ
R2213	ERD25TJ224	CARBON 0.25W 5% 220KΩ
R2214	ERD25TJ153	CARBON 0.25W 5% 15KΩ
R2215	ERD25TJ824	CARBON 0.25W 5% 820KΩ
R2218	ERJ6GMYJ471	S.M. CARBON 0.1W 1% 470Ω
R2219	ERJ6GMYJ471	S.M. CARBON 0.1W 1% 470Ω
R2224	EVNDXAA00B54	SEPERATION ADJUST 50KΩ
R2225	ERD25TJ103	CARBON 0.25W 5% 10KΩ
R2226	ERD25TJ103	CARBON 0.25W 5% 10KΩ
R2227	ERD25TJ223	CARBON 0.25W 5% 22KΩ
R2228	ERD25TJ471	CARBON 0.25W 5% 470Ω
R2238	ERD25TJ271	CARBON 0.25W 5% 270Ω
R2239	ERD25TJ271	CARBON 0.25W 5% 270Ω
R2241	ERD25TJ101	CARBON 0.25W 5% 100Ω
R2246	ERD25TJ562	CARBON 0.25W 5% 5.6KΩ
R2247	ERD25TJ272	CARBON 0.25W 5% 2.7KΩ
R2248	ERD25TJ102	CARBON 0.25W 5% 1.0KΩ
R2249	ERD25TJ102	CARBON 0.25W 5% 1.0KΩ
R2250	ERD25TJ104	CARBON 0.25W 5% 100KΩ
R2251	ERD25TJ104	CARBON 0.25W 5% 100KΩ
R2252	ERD25TJ221	CARBON 0.25W 5% 220Ω
R2260	ERD25TJ472	CARBON 0.25W 5% 4.7KΩ
R2351	ERD25TJ102	CARBON 0.25W 5% 1.0KΩ
R2352	ERD25TJ102	CARBON 0.25W 5% 1.0KΩ
R2353	ERD25TJ181	CARBON 0.25W 5% 180Ω
R2354	ERD25TJ181	CARBON 0.25W 5% 180Ω
R2355	ERD25TJ302	CARBON 0.25W 5% 3.0KΩ
R2356	ERD25TJ302	CARBON 0.25W 5% 3.0KΩ
R2357	ERD25TJ104	CARBON 0.25W 5% 100KΩ
R2358	ERD25TJ104	CARBON 0.25W 5% 100KΩ
R2359	ERQ14AJ4R7	FILM 0.25W 5% ⚠ 4.7Ω
R2360	ERQ14AJ4R7	FILM 0.25W 5% ⚠ 4.7Ω
R2361	ERD25TJ224	CARBON 0.25W 5% 220KΩ
R2362	ERD25TJ114	CARBON 0.25W 5% 110KΩ
R2363	ERQ14AJ331	FILM 0.25W 5% ⚠ 330Ω
R2364	ERD25TJ821	CARBON 0.25W 5% 820Ω
R2365	ERD25TJ821	CARBON 0.25W 5% 820Ω
R2366	ERF10ZK2R2	WOUND 10W 10% ⚠ 2.2Ω
R2367	ERD25TJ392	CARBON 0.25W 5% 3.9KΩ
R2369	ERD25TJ392	CARBON 0.25W 5% 3.9KΩ
R2371	ERD25TJ103	CARBON 0.25W 5% 10KΩ
R2372	ERD25TJ103	CARBON 0.25W 5% 10KΩ
R2401	ERQ14AJ470	FILM 0.25W 5% ⚠ 47Ω
R2402	ERQ14AJ560	FILM 0.25W 5% ⚠ 56Ω
R2418	ERD25TJ101	CARBON 0.25W 5% 100Ω
R2419	ERD25TJ102	CARBON 0.25W 5% 1.0KΩ
R2420	ERD25TJ102	CARBON 0.25W 5% 1.0KΩ
R2421	ERD25TJ102	CARBON 0.25W 5% 1.0KΩ
R2422	ERD25TJ102	CARBON 0.25W 5% 1.0KΩ
R2423	ERD25TJ101	CARBON 0.25W 5% 100Ω
R2451	ERD25TJ103	CARBON 0.25W 5% 10KΩ
R2452	ERD25TJ153	CARBON 0.25W 5% 15KΩ
R2453	ERD25TJ103	CARBON 0.25W 5% 10KΩ
R2454	ERD25TJ682	CARBON 0.25W 5% 6.8KΩ
R2455	ERD25TJ101	CARBON 0.25W 5% 100Ω
R2456	ERD25TJ223	CARBON 0.25W 5% 22KΩ
R2457	ERD25TJ223	CARBON 0.25W 5% 22KΩ
R2458	ERD25TJ123	CARBON 0.25W 5% 12KΩ
R2459	ERD25TJ153	CARBON 0.25W 5% 15KΩ
R2460	ERD25TJ104	CARBON 0.25W 5% 100KΩ
R2461	ERD25TJ223	CARBON 0.25W 5% 22KΩ
R2462	ERD25TJ101	CARBON 0.25W 5% 100Ω
R2463	ERD25TJ183	CARBON 0.25W 5% 18KΩ
R2464	ERD25TJ101	CARBON 0.25W 5% 100Ω
R2465	ERD25TJ123	CARBON 0.25W 5% 12KΩ
R2466	ERD25TJ103	CARBON 0.25W 5% 10KΩ
R2467	ERD25TJ103	CARBON 0.25W 5% 10KΩ
R2468	ERD25TJ102	CARBON 0.25W 5% 1.0KΩ
R2469	ERD25TJ102	CARBON 0.25W 5% 1.0KΩ
R2470	ERD25TJ223	CARBON 0.25W 5% 22KΩ
R2471	ERD25TJ223	CARBON 0.25W 5% 22KΩ
R2472	ERD25TJ102	CARBON 0.25W 5% 1.0KΩ

Ref No.	Part No.	Description
R2473	ERD25TJ102	CARBON 0.25W 5% 1.0KΩ
R2474	ERD25TJ272	CARBON 0.25W 5% 2.7KΩ
R2475	ERD25TJ103	CARBON 0.25W 5% 10KΩ
R2601	ERX2SJ8R2	METAL 2W 5% ⚠ 8.2Ω
R2602	ERX2SJ8R2	METAL 2W 5% ⚠ 8.2Ω
R2651	ERG1ANJ221	METAL 1W 5% ⚠ 220Ω
R2652	ERG1ANJ221	METAL 1W 5% ⚠ 220Ω
R3002	ERD25TJ101	CARBON 0.25W 5% 100Ω
R3003	ERD25TJ101	CARBON 0.25W 5% 100Ω
R3016	ERD25TJ101	CARBON 0.25W 5% 100Ω
R3017	ERD25TJ101	CARBON 0.25W 5% 100Ω
R3018	ERD25TJ102	CARBON 0.25W 5% 1.0KΩ
R3019	ERD25TJ102	CARBON 0.25W 5% 1.0KΩ
R3022	ERD25TJ101	CARBON 0.25W 5% 100Ω
R3031	ERDS1FYJ101	CARBON 0.5W 10% ⚠ 100Ω
R3032	ERD25TJ103	CARBON 0.25W 5% 10KΩ
R3034	ERD25TJ101	CARBON 0.25W 5% 100Ω
R3037	ERD25TJ101	CARBON 0.25W 5% 100Ω
R3039	ERD25TJ102	CARBON 0.25W 5% 1.0KΩ
R3040	ERD25TJ102	CARBON 0.25W 5% 1.0KΩ
R3046	ERD25TJ102	CARBON 0.25W 5% 1.0KΩ
R3051	ERD25TJ102	CARBON 0.25W 5% 1.0KΩ
R3054	ERD25TJ103	CARBON 0.25W 5% 10KΩ
R3055	ERD25TJ101	CARBON 0.25W 5% 100Ω
R3057	ERD25TJ101	CARBON 0.25W 5% 100Ω
R3076	ERD25TJ103	CARBON 0.25W 5% 10KΩ
R3078	ERD25TJ101	CARBON 0.25W 5% 100Ω
R3090	ERD25TJ122	CARBON 0.25W 5% 1.2KΩ
R3092	ERD25TJ103	CARBON 0.25W 5% 10KΩ
R3093	ERD25TJ101	CARBON 0.25W 5% 100Ω
R3094	ERD25TJ101	CARBON 0.25W 5% 100Ω
R3096	ERD25TJ103	CARBON 0.25W 5% 10KΩ
R3097	ERD25TJ103	CARBON 0.25W 5% 10KΩ
R3099	ERD25TJ103	CARBON 0.25W 5% 10KΩ
R3101	ERD25TJ104	CARBON 0.25W 5% 100KΩ
R3106	ERD25TJ101	CARBON 0.25W 5% 100Ω
R3107	ERD25TJ101	CARBON 0.25W 5% 100Ω
R3108	ERD25TJ101	CARBON 0.25W 5% 100Ω
R3109	ERD25TJ101	CARBON 0.25W 5% 100Ω
R3167	ERD25TJ682	CARBON 0.25W 5% 6.8KΩ
R3169	ERD25TJ103	CARBON 0.25W 5% 10KΩ
R3171	ERD25TJ102	CARBON 0.25W 5% 1.0KΩ
R3172	ERD25TJ102	CARBON 0.25W 5% 1.0KΩ
R3174	ERD25TJ333	CARBON 0.25W 5% 33KΩ
R3175	ERD25TJ333	CARBON 0.25W 5% 33KΩ
R3176	ERD25TJ561	CARBON 0.25W 5% 560Ω
R3177	ERD25TJ561	CARBON 0.25W 5% 560Ω
R3178	ERD25TJ102	CARBON 0.25W 5% 1.0KΩ
R3179	ERD25TJ392	CARBON 0.25W 5% 3.9KΩ
R3180	ERD25TJ221	CARBON 0.25W 5% 220Ω
R3181	ERD25TJ392	CARBON 0.25W 5% 3.9KΩ
R3182	ERD25TJ750	CARBON 0.25W 5% 75Ω
R3183	ERD25TJ750	CARBON 0.25W 5% 75Ω
R3184	ERD25TJ750	CARBON 0.25W 5% 75Ω
R3185	ERD25TJ750	CARBON 0.25W 5% 75Ω
R3186	ERD25TJ473	CARBON 0.25W 5% 47KΩ
R3187	ERD25TJ473	CARBON 0.25W 5% 47KΩ
R3189	ERD25TJ103	CARBON 0.25W 5% 10KΩ
R3190	ERD25TJ680	CARBON 0.25W 5% 68Ω
R3191	ERDS1FJ101	CARBON 0.5W 5% ⚠ 100Ω
R3192	ERD25TJ391	CARBON 0.25W 5% 390Ω
R3194	ERD25TJ750	CARBON 0.25W 5% 75Ω
R3195	ERD25TJ682	CARBON 0.25W 5% 6.8KΩ
R3196	ERD25TJ221	CARBON 0.25W 5% 220Ω
R3197	ERD25TJ272	CARBON 0.25W 5% 2.7KΩ
R3198	ERD25TJ272	CARBON 0.25W 5% 2.7KΩ
R3301	ERD25TJ122	CARBON 0.25W 5% 1.2KΩ
R3302	ERD25TJ102	CARBON 0.25W 5% 1.0KΩ
R3303	ERD25TJ181	CARBON 0.25W 5% 180Ω
R3304	ERD25TJ181	CARBON 0.25W 5% 180Ω
R3305	ERD25TJ181	CARBON 0.25W 5% 180Ω
R3306	ERD25TJ471	CARBON 0.25W 5% 470Ω
R3309	ERD25TJ392	CARBON 0.25W 5% 3.9KΩ
R3312	ERD25TJ332	CARBON 0.25W 5% 3.3KΩ
R3313	ERD25TJ101	CARBON 0.25W 5% 100Ω
R3314	ERD25TJ151	CARBON 0.25W 5% 150Ω
R3315	ERD25TJ151	CARBON 0.25W 5% 150Ω
R3316	ERD25TJ151	CARBON 0.25W 5% 150Ω
R3318	ERD25TJ391	CARBON 0.25W 5% 390Ω
R3319	ERD25TJ471	CARBON 0.25W 5% 470Ω
R3321	ERD25TJ681	CARBON 0.25W 5% 680Ω
R3322	ERD25TJ101	CARBON 0.25W 5% 100Ω
R3332	ERD25TJ102	CARBON 0.25W 5% 1.0KΩ
R3505	ERD25TJ102	CARBON 0.25W 5% 1.0KΩ

Ref No.	Part No.	Description
R3507	ERD25TJ102	CARBON 0.25W 5% 1.0KΩ
R3510	ERD25TJ102	CARBON 0.25W 5% 1.0KΩ
R3511	ERD25TJ102	CARBON 0.25W 5% 1.0KΩ
R3512	ERD25TJ103	CARBON 0.25W 5% 10KΩ
R3516	ERD25TJ153	CARBON 0.25W 5% 15KΩ
R3519	ERD25TJ103	CARBON 0.25W 5% 10KΩ
R3541	ERD25TJ101	CARBON 0.25W 5% 100Ω
R3542	ERD25TJ101	CARBON 0.25W 5% 100Ω
R3545	ERD25TJ101	CARBON 0.25W 5% 100Ω
R3546	ERD25TJ101	CARBON 0.25W 5% 100Ω
R3547	ERD25TJ103	CARBON 0.25W 5% 10KΩ
R3552	ERD25TJ101	CARBON 0.25W 5% 100Ω
R3555	ERD25TJ101	CARBON 0.25W 5% 100Ω
R3559	ERD25TJ102	CARBON 0.25W 5% 1.0KΩ
R3562	ERD25TJ122	CARBON 0.25W 5% 1.2KΩ
R3565	ERD25TJ103	CARBON 0.25W 5% 10KΩ
R3575	ERD25TJ152	CARBON 0.25W 5% 1.5KΩ
R3576	ERD25TJ152	CARBON 0.25W 5% 1.5KΩ
R3577	ERD25TJ152	CARBON 0.25W 5% 1.5KΩ
R3580	ERD25TJ101	CARBON 0.25W 5% 100Ω
R3582	ERD25TJ103	CARBON 0.25W 5% 10KΩ
R3603	ERD25TJ102	CARBON 0.25W 5% 1.0KΩ
R3604	ERD25TJ102	CARBON 0.25W 5% 1.0KΩ
R3605	ERD25TJ102	CARBON 0.25W 5% 1.0KΩ
R3607	ERD25TJ102	CARBON 0.25W 5% 1.0KΩ
R3608	ERD25TJ102	CARBON 0.25W 5% 1.0KΩ
R3611	ERD25TJ102	CARBON 0.25W 5% 1.0KΩ
R3613	ERD25TJ102	CARBON 0.25W 5% 1.0KΩ
R3614	ERD25TJ102	CARBON 0.25W 5% 1.0KΩ
R3619	ERD25TJ102	CARBON 0.25W 5% 1.0KΩ
R3620	ERD25TJ102	CARBON 0.25W 5% 1.0KΩ
R3621	ERD25TJ102	CARBON 0.25W 5% 1.0KΩ
R3622	ERD25TJ102	CARBON 0.25W 5% 1.0KΩ
R3629	ERD25TJ101	CARBON 0.25W 5% 100Ω
R3630	ERD25TJ101	CARBON 0.25W 5% 100Ω

SWITCHES

S301	EVQR1AL13	SWITCH
S811 ⚠	ESB99267S	SWITCH
S1103	EVQQSC11G	SWITCH
S1104	EVQQSC11G	SWITCH
S1106	EVQQSC11G	SWITCH
S1107	EVQQSC13K	SWITCH
S1111	EVQQSC13K	SWITCH
S1112	EVQQSC13K	SWITCH
S1113	EVQQSC13K	SWITCH
S1114	EVQQSC13K	SWITCH
S1115	EVQQSC13K	SWITCH
S1119	EVQQSC11G	SWITCH
S1120	EVQQSC11G	SWITCH
S1121	EVQQSC13K	SWITCH
S1122	EVQQSC13K	SWITCH
S1123	EVQQSC13K	SWITCH
S1124	EVQQSC13K	SWITCH
S1126	ESB64613	SWITCH
S2601	ESD7034	SWITCH

TRANSFORMERS

T101	EIV7EN078B	COIL
T531	ETH19Y53AY	TRANSFORMER
T551 ⚠	TLF15548F	FLYBACK TRANSFORMER
T825 ⚠	ETS49K596A	TRANSFORMER
T1291⚠	ETP35KE65E	TRANSFORMER

FILTERS

X101	G1962-N100	SAW FILTER
X131	EFCS5R5MW5	FILTER
X601	TSS2003-M	CRYSTAL
X602	TSS2026-M	CRYSTAL
X1210	EFOGC6004A4	FILTER
X2101	EFCH33MVK1N	FILTER
X2106	EFCS5R74MS5A	FILTER
X2107	EFCS5R74MS5A	FILTER
X2108	EFCS5R5MS5	FILTER
X2109	EFCS5R5MS5	FILTER

Ref No.	Part No.	Description		

E.V. P.C.B. TNP107848

CAPACITORS

C681	ECEA1CN220SB	ELECTROLYTIC	16V	22μF
C683	ECCR1H121J5	CERAMIC	50V	120pF
C684	ECEA1HN010SB	ELECTROLYTIC	50V	1μF
C685	ECEA1CU470B	ELECTROLYTIC	16V	47μF

COILS

L681	ELESN150KA	COIL
L682	ELESN390KA	COIL

DIODES

D681	MA4056	DIODE

Ref No.	Part No.	Description			

RESISTORS

R682	ERDS2TJ471	CARBON	0.25W	5%	470Ω
R683	ERDS2TJ222	CARBON	0.25W	5%	2.2KΩ
R684	ERDS2TJ102	CARBON	0.25W	5%	1.0KΩ
R685	ERDS2TJ223	CARBON	0.25W	5%	22KΩ
R686	ERDS2TJ105	CARBON	0.25W	5%	1.0MΩ
R687	ERDS2TJ222	CARBON	0.25W	5%	2.2KΩ
R688	ERDS2TJ821	CARBON	0.25W	5%	820Ω
R689	ERDS2TJ391	CARBON	0.25W	5%	390Ω
R691	ERDS2TJ271	CARBON	0.25W	5%	270Ω
R692	ERDS2TJ392	CARBON	0.25W	5%	3.9KΩ
R694	ERDS2TJ391	CARBON	0.25W	5%	390Ω

TRANSISTORS

Q681	2SC3311ATA	TRANSISTOR
Q682	2SA1309ATA	TRANSISTOR